Preface

A88XM GAMING
Motherboard

G52-79031X1

Copyright Notice

The material in this document is the intellectual property of **MICRO-STAR INTERNATIONAL**. We take every care in the preparation of this document, but no guarantee is given as to the correctness of its contents. Our products are under continual improvement and we reserve the right to make changes without notice.

Trademarks

All trademarks in this manual are properties of their respective owners.

- MSI® is registered trademark of Micro-Star Int'l Co.,Ltd.
- NVIDIA® is registered trademark of NVIDIA Corporation.
- ATI® is registered trademark of AMD Corporation.
- AMD® is registered trademarks of AMD Corporation.
- Intel® is registered trademarks of Intel Corporation.
- Windows® is registered trademarks of Microsoft Corporation.
- AMI® is registered trademark of American Megatrends Inc.
- Award® is a registered trademark of Phoenix Technologies Ltd.
- Sound Blaster® is registered trademark of Creative Technology Ltd.
- Realtek® is registered trademark of Realtek Semiconductor Corporation.
- JMicron® is registered trademark of JMicron Technology Corporation.
- Netware® is registered trademark of Novell, Inc.
- Lucid® is trademark of LucidLogix Technologies, Ltd.
- VIA® is registered trademark of VIA Technologies, Inc.
- ASMedia® is registered trademark of ASMedia Technology Inc.
- iPad, iPhone, and iPod are trademarks of Apple Inc.
- Qualcomm Atheros and Killer are trademarks of Qualcomm Atheros Inc.

Revision History

Revision	Revision History	Date
V1.0	First release	2014/ 01

Smartphone Application

MSI+ is a smart web gadget that works as a shopping navigator and provides specs comparison for IT buyers. With a simple tap of the smartphone, you'll efficiently locate your ideal products from a wide variety of choices and, if product details are required, you may easily download user manuals within minutes. Better yet, the power calculator provides accurate estimates of power unit capacity for DIY users.

ANDROID APP ON Google play

Available on the iPhone App Store

Technical Support

If a problem arises with your system and no solution can be obtained from the user's manual, please contact your place of purchase or local distributor. Alternatively, please try the following help resources for further guidance.

Visit the MSI website for technical guide, BIOS updates, driver updates, and other information:
http://www.msi.com/service/download/

Contact our technical staff at:
http://register.msi.com/

Safety Instructions

- Always read the safety instructions carefully.
- Keep this User's Manual for future reference.
- Keep this equipment away from humidity.
- Lay this equipment on a reliable flat surface before setting it up.
- The openings on the enclosure are for air convection hence protects the equipment from overheating. DO NOT COVER THE OPENINGS.
- Make sure the voltage of the power source is at 110/220V before connecting the equipment to the power inlet.
- Place the power cord such a way that people can not step on it. Do not place anything over the power cord.
- Always Unplug the Power Cord before inserting any add-on card or module.
- All cautions and warnings on the equipment should be noted.
- Never pour any liquid into the opening that can cause damage or cause electrical shock.
- If any of the following situations arises, get the equipment checked by service personnel:
  - The power cord or plug is damaged.
  - Liquid has penetrated into the equipment.
  - The equipment has been exposed to moisture.
  - The equipment does not work well or you can not get it work according to User's Manual.
  - The equipment has been dropped and damaged.
  - The equipment has obvious sign of breakage.
- DO NOT LEAVE THIS EQUIPMENT IN AN ENVIRONMENT ABOVE 60°C (140°F), IT MAY DAMAGE THE EQUIPMENT.

FCC-B Radio Frequency Interference Statement

This equipment has been tested and found to comply with the limits for a Class B digital device, pursuant to Part 15 of the FCC Rules. These limits are designed to provide reasonable protection against harmful interference in a residential installation. This equipment generates, uses and can radiate radio frequency energy and, if not installed and used in accordance with the instructions, may cause harmful interference to radio communications. However, there is no guarantee that interference will not occur in a particular installation. If this equipment does cause harmful interference to radio or television reception, which can be determined by turning the equipment off and on, the user is encouraged to try to correct the interference by one or more of the measures listed below.

- Reorient or relocate the receiving antenna.
- Increase the separation between the equipment and receiver.
- Connect the equipment into an outlet on a circuit different from that to which the receiver is connected.
- Consult the dealer or an experienced radio/television technician for help.

Notice 1

The changes or modifications not expressly approved by the party responsible for compliance could void the user's authority to operate the equipment.

Notice 2

Shielded interface cables and A.C. power cord, if any, must be used in order to comply with the emission limits.

VOIR LA NOTICE D'INSTALLATION AVANT DE RACCORDER AU RESEAU.

FC Micro-Star International
MS-7903

This device complies with Part 15 of the FCC Rules. Operation is subject to the following two conditions:

1) this device may not cause harmful interference, and
2) this device must accept any interference received, including interference that may cause undesired operation.

CE Conformity

Hereby, Micro-Star International CO., LTD declares that this device is in compliance with the essential safety requirements and other relevant provisions set out in the European Directive.

CE

N1996

Radiation Exposure Statement

This equipment complies with FCC radiation exposure limits set forth for an uncontrolled environment. This equipment and its antenna should be installed and operated with minimum distance 20 cm between the radiator and your body. This equipment and its antenna must not be co-located or operating in conjunction with any other antenna or transmitter.

European Community Compliance Statement

The equipment complies with the RF Exposure Requirement 1999/519/EC, Council Recommendation of 12 July 1999 on the limitation of exposure of the general public to electromagnetic fields (0–300GHz). This wireless device complies with the R&TTE Directive.

Taiwan Wireless Statements

無線設備警告聲明

經型式認證合格之低功率射頻電機，非經許可，公司、商號或使用者均不得擅自變更頻率、加大功率或變更原設計之特性及功能。

低功率射頻電機之使用不得影響飛航安全及干擾合法通信；經發現有干擾現象時，應立即停用，並改善至無干擾時方得繼續使用。前項合法通信，指依電信法規定作業之無線電通信。低功率射頻電機須忍受合法通信或工業、科學及醫療用電波輻射性電機設備之干擾。

警告使用者:這是甲類資訊產品，在居住的環境中使用時，可能會造成無線電干擾，在這種情況下，使用者會被要求採取某些適當的對策。

Japan VCCI Class B Statement

クラス B 情報技術装置

この装置は、情報技術装置等電波障害自主規制協議会（VCCI）の基準に基づくクラスB情報技術装置です。この装置が家庭内でラジオやテレビジョン受信機に近接して使われると、受信障害を引き起こすことがあります。取扱説明書にしたがって正しい取り扱いをしてください。

Korea Warning Statements

당해 무선설비는 운용중 전파혼신 가능성이 있음

Battery Information



European Union:

Batteries, battery packs, and accumulators should not be disposed of as unsorted household waste. Please use the public collection system to return, recycle, or treat them in compliance with the local regulations.



廢電池請回收

Taiwan:

For better environmental protection, waste batteries should be collected separately for recycling or special disposal.



California, USA:

The button cell battery may contain perchlorate material and requires special handling when recycled or disposed of in California.

For further information please visit:

http://www.dtsc.ca.gov/hazardouswaste/perchlorate/

CAUTION: There is a risk of explosion, if battery is incorrectly replaced.

Replace only with the same or equivalent type recommended by the manufacturer.

Chemical Substances Information

In compliance with chemical substances regulations, such as the EU REACH Regulation (Regulation EC No. 1907/2006 of the European Parliament and the Council), MSI provides the information of chemical substances in products at:

http://www.msi.com/html/popup/csr/evmtprtt_pcm.html

WEEE (Waste Electrical and Electronic Equipment) Statement

ENGLISH



To protect the global environment and as an environmentalist, MSI must remind you that...

Under the European Union ("EU") Directive on Waste Electrical and Electronic Equipment, Directive 2002/96/EC, which takes effect on August 13, 2005, products of "electrical and electronic equipment" cannot be discarded as municipal wastes anymore, and manufacturers of covered electronic equipment will be obligated to take back such products at the end of their useful life. MSI will comply with the product take back requirements at the end of life of MSI-branded products that are sold into the EU. You can return these products to local collection points.

DEUTSCH

Hinweis von MSI zur Erhaltung und Schutz unserer Umwelt

Gemäß der Richtlinie 2002/96/EG über Elektro- und Elektronik-Altgeräte dürfen Elektro- und Elektronik-Altgeräte nicht mehr als kommunale Abfälle entsorgt werden. MSI hat europaweit verschiedene Sammel- und Recyclingunternehmen beauftragt, die in die Europäische Union in Verkehr gebrachten Produkte, am Ende seines Lebenszyklus zurückzunehmen. Bitte entsorgen Sie dieses Produkt zum gegebenen Zeitpunkt ausschliesslich an einer lokalen Altgerätesammelstelle in Ihrer Nähe.

FRANÇAIS

En tant qu'écologiste et afin de protéger l'environnement, MSI tient à rappeler ceci...

Au sujet de la directive européenne (EU) relative aux déchets des équipement électriques et électroniques, directive 2002/96/EC, prenant effet le 13 août 2005, que les produits électriques et électroniques ne peuvent être déposés dans les décharges ou tout simplement mis à la poubelle. Les fabricants de ces équipements seront obligés de récupérer certains produits en fin de vie. MSI prendra en compte cette exigence relative au retour des produits en fin de vie au sein de la communauté européenne. Par conséquent vous pouvez retourner localement ces matériels dans les points de collecte.

РУССКИЙ

Компания MSI предпринимает активные действия по защите окружающей среды, поэтому напоминаем вам, что....

В соответствии с директивой Европейского Союза (ЕС) по предотвращению загрязнения окружающей среды использованным электрическим и электронным оборудованием (директива WEEE 2002/96/EC), вступающей в силу 13 августа 2005 года, изделия, относящиеся к электрическому и электронному оборудованию, не могут рассматриваться как бытовой мусор, поэтому производители вышеперечисленного электронного оборудования обязаны принимать его для переработки по окончании срока службы. MSI обязуется соблюдать требования по приему продукции, проданной под маркой MSI на территории ЕС, в переработку по окончании срока службы. Вы можете вернуть эти изделия в специализированные пункты приема.

ESPAÑOL

MSI como empresa comprometida con la protección del medio ambiente, recomienda:

Bajo la directiva 2002/96/EC de la Unión Europea en materia de desechos y/o equipos electrónicos, con fecha de rigor desde el 13 de agosto de 2005, los productos clasificados como “eléctricos y equipos electrónicos” no pueden ser depositados en los contenedores habituales de su municipio, los fabricantes de equipos electrónicos, están obligados a hacerse cargo de dichos productos al termino de su período de vida. MSI estará comprometido con los términos de recogida de sus productos vendidos en la Unión Europea al final de su periodo de vida. Usted debe depositar estos productos en el punto limpio establecido por el ayuntamiento de su localidad o entregar a una empresa autorizada para la recogida de estos residuos.

NEDERLANDS

Om het milieu te beschermen, wil MSI u eraan herinneren dat….

De richtlijn van de Europese Unie (EU) met betrekking tot Vervuiling van Electrische en Electronische producten (2002/96/EC), die op 13 Augustus 2005 in zal gaan kunnen niet meer beschouwd worden als vervuiling. Fabrikanten van dit soort producten worden verplicht om producten retour te nemen aan het eind van hun levenscyclus. MSI zal overeenkomstig de richtlijn handelen voor de producten die de merknaam MSI dragen en verkocht zijn in de EU. Deze goederen kunnen geretourneerd worden op lokale inzamelingspunten.

SRPSKI

Da bi zaštitili prirodnu sredinu, i kao preduzeće koje vodi računa o okolini i prirodnoj sredini, MSI mora da vas podesti da…

Po Direktivi Evropske unije (“EU”) o odbačenoj ekektronskoj i električnoj opremi, Direktiva 2002/96/EC, koja stupa na snagu od 13. Avgusta 2005, proizvodi koji spadaju pod “elektronsku i električnu opremu” ne mogu više biti odbačeni kao običan otpad i proizvođači ove opreme biće prinuđeni da uzmu natrag ove proizvode na kraju njihovog uobičajenog veka trajanja. MSI će poštovati zahtev o preuzimanju ovakvih proizvoda kojima je istekao vek trajanja, koji imaju MSI oznaku i koji su prodati u EU. Ove proizvode možete vratiti na lokalnim mestima za prikupljanje.

POLSKI

Aby chronić nasze środowisko naturalne oraz jako firma dbająca o ekologię, MSI przypomina, że...

Zgodnie z Dyrektywą Unii Europejskiej (“UE”) dotyczącą odpadów produktów elektrycznych i elektronicznych (Dyrektywa 2002/96/EC), która wchodzi w życie 13 sierpnia 2005, tzw. “produkty oraz wyposażenie elektryczne i elektroniczne “ nie mogą być traktowane jako śmieci komunalne, tak więc producenci tych produktów będą zobowiązani do odbierania ich w momencie gdy produkt jest wycofywany z użycia. MSI wypełni wymagania UE, przyjmując produkty (sprzedawane na terenie Unii Europejskiej) wycofywane z użycia. Produkty MSI będzie można zwracać w wyznaczonych punktach zbiorczych.

TÜRKÇE

Çevreci özelliğiyle bilinen MSI dünyada çevreyi korumak için hatırlatır:

Avrupa Birliği (AB) Kararnamesi Elektrik ve Elektronik Malzeme Atığı, 2002/96/EC Kararnamesi altında 13 Ağustos 2005 tarihinden itibaren geçerli olmak üzere, elektrikli ve elektronik malzemeler diğer atıklar gibi çöpe atılamayacak ve bu elektonik cihazların üreticileri, cihazların kullanım süreleri bittikten sonra ürünleri geri toplamakla yükümlü olacaktır. Avrupa Birliği'ne satılan MSI markalı ürünlerin kullanım süreleri bittiğinde MSI ürünlerin geri alınması isteği ile işbirliği içerisinde olacaktır. Ürünlerinizi yerel toplama noktalarına bırakabilirsiniz.

ČESKY

Záleží nám na ochraně životního prostředí - společnost MSI upozorňuje...

Podle směrnice Evropské unie ("EU") o likvidaci elektrických a elektronických výrobků 2002/96/EC platné od 13. srpna 2005 je zakázáno likvidovat "elektrické a elektronické výrobky" v běžném komunálním odpadu a výrobci elektronických výrobků, na které se tato směrnice vztahuje, budou povinni odebírat takové výrobky zpět po skončení jejich životnosti. Společnost MSI splní požadavky na odebírání výrobků značky MSI, prodávaných v zemích EU, po skončení jejich životnosti. Tyto výrobky můžete odevzdat v místních sběrnách.

MAGYAR

Annak érdekében, hogy környezetünket megvédjük, illetve környezetvédőként fellépve az MSI emlékezteti Önt, hogy ...

Az Európai Unió („EU") 2005. augusztus 13-án hatályba lépő, az elektromos és elektronikus berendezések hulladékairól szóló 2002/96/EK irányelve szerint az elektromos és elektronikus berendezések többé nem kezelhetőek lakossági hulladékként, és az ilyen elektronikus berendezések gyártói kötelessé válnak az ilyen termékek visszavételére azok hasznos élettartama végén. Az MSI betartja a termékvisszavétellel kapcsolatos követelményeket az MSI márkanév alatt az EU-n belül értékesített termékek esetében, azok élettartamának végén. Az ilyen termékeket a legközelebbi gyűjtőhelyre viheti.

ITALIANO

Per proteggere l'ambiente, MSI, da sempre amica della natura, ti ricorda che….

In base alla Direttiva dell'Unione Europea (EU) sullo Smaltimento dei Materiali Elettrici ed Elettronici, Direttiva 2002/96/EC in vigore dal 13 Agosto 2005, prodotti appartenenti alla categoria dei Materiali Elettrici ed Elettronici non possono più essere eliminati come rifiuti municipali: i produttori di detti materiali saranno obbligati a ritirare ogni prodotto alla fine del suo ciclo di vita. MSI si adeguerà a tale Direttiva ritirando tutti i prodotti marchiati MSI che sono stati venduti all'interno dell'Unione Europea alla fine del loro ciclo di vita. È possibile portare i prodotti nel più vicino punto di raccolta

CONTENTS

Preface i
Copyright Notice ii
Trademarks ii
Revision History ii
Smartphone Application iii
Technical Support iii
Safety Instructions iv
FCC-B Radio Frequency Interference Statement v
CE Conformity v
Radiation Exposure Statement vi
European Community Compliance Statement vi
Taiwan Wireless Statements vi
Japan VCCI Class B Statement vi
Korea Warning Statements vi
Battery Information vii
Chemical Substances Information vii
WEEE (Waste Electrical and Electronic Equipment) Statement viii
Chapter 1 Getting Started 1-1
Packing Contents 1-2
Optional Accessories 1-2
Assembly Precautions 1-3
Motherboard Specifications 1-4
Connectors Quick Guide 1-7
Back Panel Quick Guide 1-9
APU (Accelerated Processing Units) 1-11
Introduction to FM2/ FM2+ APU 1-11
APU & Cooler Installation 1-12
Memory 1-14
Dual-Channel mode Population Rule 1-14
Mounting Screw Holes 1-15
Power Supply 1-16
JPWR1~2: ATX Power Connectors 1-16
Expansion Slots 1-17
PCI_E1~4: PCIe Expansion Slots 1-17
Video/ Graphics Cards 1-18
Single Video Card Installation 1-18
AMD CrossFire™ (Multi-GPU) Technology 1-19
Internal Connectors 1-21
SATA1~8: SATA Connectors 1-21

CPUFAN,SYSFAN1~2: Fan Power Connectors 1-22
JFP1, JFP2: System Panel Connectors 1-23
JUSB1 ~ 3: USB 2.0 Expansion Connectors 1-24
JUSB4: USB 3.0 Expansion Connector 1-24
JCI1: Chassis Intrusion Connector 1-25
JTPM1: TPM Module Connector 1-25
JCOM1: Serial Port Connector 1-26
JAUD1: Front Panel Audio Connector 1-26
Jumper 1-27
JBAT1: Clear CMOS Jumper 1-27
Buttons & Switches 1-28
OC1: OC Genie Button 1-28
POWER1: Power Button 1-29
RESET1: Reset Button 1-29
OC_SW1: OC Genie Mode Switch 1-30
SLOW_1: Slow Mode Booting Switch 1-30
LED Status Indicators 1-31
OC Genie Mode LEDs 1-31
Drivers and Utilities 1-32
Total Installer 1-32
Chapter 2 Quick Installation 2-1
APU Installation 2-2
Memory Installation 2-4
Motherboard Installation 2-5
Power Connectors Installation 2-7
SATA HDD Installation 2-9
mSATA SSD Installation 2-10
Front Panel Connector Installation 2-11
JFP1 Connector Installation 2-11
Front Panel Audio Connector Installation 2-11
Peripheral Connector Installation 2-12
USB2.0 Connector Installation 2-12
USB3.0 Connector Installation 2-12
Graphics Card Installation 2-13
Chapter 3 BIOS Setup 3-1
Entering Setup 3-2
Entering BIOS Setup 3-2
Overview 3-3
Operation 3-5
SETTINGS 3-6

System Status 3-6
Advanced 3-7
Boot 3-12
Security 3-12
Save & Exit 3-13
OC 3-14
M-FLASH 3-19
OC PROFILE 3-20
HARDWARE MONITOR 3-21
Appendix A Realtek Audio A-1
Software Configuration A-2
Software panel overview A-2
Auto popup dialog A-3
Hardware Default Setting A-4
Appendix B AMD RAID B-1
Introduction B-2
Using AMD RAID Controller BIOS Configuration Utility B-3
Understanding the Colour Code B-3
Initialize Disks B-4
Create Arrays B-5
Delete Arrays B-6
Swap Arrays B-7
Manage Spares B-8
Change the Controller Options B-9
Booting the system from an array B-9
Pausing the boot sequence for warning messages B-9
Change the Staggered Spinup Count B-10
Installing Driver B-11
Installing OS on 2.2TB RAID B-12

Chapter 1

Getting Started

Thank you for choosing the A88XM GAMING Series (MS-7903 v1.X) M-ATX motherboard. The A88XM GAMING Series motherboards are based on AMD® A88X chipset for optimal system efficiency. Designed to fit the advanced AMD® FM2+/ FM2 processor, the A88XM GAMING Series motherboards deliver a high performance and professional desktop platform solution.

Packing Contents

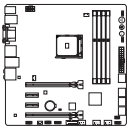
Motherboard


Drivers & Utilities Disc



Motherboard User Guide


I/O Shield

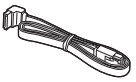
SATA Cable

Optional Accessories


USB 3.0 Bracket

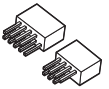
M-Connector

* These pictures are for reference only and may vary without notice.
* The packing contents may vary according to the model you purchased.
* If you need to purchase the optional accessories or request part numbers, please visit the MSI website at http://www.msi.com/index.php or consult the dealer.

Assembly Precautions

- The components included in this package are prone to damage from electrostatic discharge (ESD). Please adhere to the following instructions to ensure successful computer assembly.
- Always turn off the power supply and unplug the power cord from the power outlet before installing or removing any computer component.
- Ensure that all components are securely connected. Loose connections may cause the computer to not recognize a component or fail to start.
- Hold the motherboard by the edges to avoid touching sensitive components.
- It is recommended to wear an electrostatic discharge (ESD) wrist strap when handling the motherboard to prevent electrostatic damage. If an ESD wrist strap is not available, discharge yourself of static electricity by touching another metal object before handling the motherboard.
- Store the motherboard in an electrostatic shielding container or on an antistatic pad whenever the motherboard is not installed.
- Before turning on the computer, ensure that there are no loose screws or metal components on the motherboard or anywhere within the computer case.
- Do not use the computer in a high-temperature environment.
- Do not boot the computer before installation is completed. This could cause permanent damage to the components as well as injury to the user.
- If you need help during any installation step, please consult a certified computer technician.



A screwdriver (not included) may be required for computer assembly.

Motherboard Specifications

CPU Support	■ AMD Socket FM2+/ FM2 A-Series/Athlon™ Processors
Chipset	■ AMD A88X
Memory Support	■ 4x DDR3 memory slots supporting up to 64GB ■ Supports DDR3 2400 (OC)/ 2133/ 1866/ 1600/ 1333 MHz ■ Dual channel memory architecture ■ Supports non-ECC, un-buffered memory ■ Supports AMD Memory Profile (AMP) ■ Supports Extreme Memory Profile (XMP)
Expansion Slots	■ 2x PCIe x16 slots - PCI_E1 supports up to PCIe 3.0 x16 speed* - PCI_E4 supports up to PCIe 3.0 x8 speed* ■ 2x PCIe 2.0 x1 slots *** Only FM2+ processors can support PCIe 3.0**
Graphics	■ 1x VGA port, supporting a maximum resolution of 1920x1200 @ 60Hz, 24bpp ■ 1x DVI-D port, supporting the maximum resolutions of 2560x1600@60Hz, 24bpp/ 1920x1200 @ 60Hz, 24bpp ■ 1x HDMI port, supporting the maximum resolutions of 4096x2160@24Hz, 36bpp*/ 3840x2160@30Hz, 36bpp*/ 1920x1200@120Hz, 36bpp and 1920x1200@60Hz, 36bpp ■ 1x DisplayPort, supporting a maximum resolution of 4096x2160@24HZ, 24bpp** *** Only support when using an FM2+ APU.** **** The DisplayPort does not support "Hot-plug".**
Multi-GPU Support	■ Supports 2-Way AMD® CrossFire™ Technology* *** Supports Windows 7 and Windows 8.**
Storage	■ AMD® A88X Chipset - 8x SATA 6Gb/s ports - Supports RAID 0, RAID1, RAID5 and RAID 10
USB	■ AMD® A88X Chipset - 4x USB 3.0 ports (2 ports on the back panel, 2 ports available through the internal USB connectors) - 8x USB 2.0 ports (2 ports on the back panel, 6 ports available through the internal USB connectors) ■ VIA VL806 Chipset - 2x USB 3.0 ports on the back panel* *** These USB 3.0 ports do not support M-Flash recovery function.**
Audio	■ Realtek® ALC1150 Codec - 7.1-Channel High Definition Audio - Supports S/PDIF output
LAN	■ Killer E2205 Gigabit LAN controller* - 1x LAN port on the backpanel *** The Killer Network Manager is only available for Windows 7 and Windows 8 currently. The supported drivers for other operating systems would be available on the website if provided by vendor.**

Back Panel Connectors	■ 1x PS/2 keyboard/ mouse combo port ■ 2x USB 2.0 ports ■ 4x USB 3.0 ports ■ 1x VGA port ■ 1x DVI-D port ■ 1x HDMI port ■ 1x DisplayPort ■ 1x Optical S/PDIF-Out connector ■ 1x LAN (RJ45) port ■ 6x OFC audio jacks
Internal Connectors	■ 1x 24-pin ATX main power connector ■ 1x 8-pin ATX 12V power connector ■ 8x SATA 6Gb/s connectors ■ 3x USB 2.0 connectors (supports additional 6 USB 2.0 ports) ■ 1x USB 3.0 connector (supports additional 2 USB 3.0 ports) ■ 1x 4-pin CPU fan connector ■ 2x 4-pin system fan connectors ■ 1x Front panel audio connector ■ 2x System panel connectors ■ 1x Chassis Intrusion connector ■ 1x TPM module connector ■ 1x Serial port connector ■ 1x Clear CMOS jumper ■ 1x OC Genie button ■ 1x Power button ■ 1x Reset button ■ 1x OC Genie mode switch ■ 1x Slow mode booting switch
I/O Controller	■ Fintek 71878 Controller Chip
Hardware Monitor	■ CPU/System temperature detection ■ CPU/System fan speed detection ■ CPU/System fan speed control
BIOS Features	■ 64 Mb flash ■ UEFI AMI BIOS ■ ACPI 5.0, PnP 1.0a, SM BIOS 2.7, DMI 2.0 ■ Multi-language
Special Features	■ Military Class 4 ■ Military Class Essentials ■ OC Genie 4 ■ Click BIOS 4 ■ AMD CrossFire ■ AMD Dual Graphics ■ 4K UHD Support ■ 4 Display Outputs ■ PCI Express Gen 3 ■ USB 3.0 ■ SATA 6Gb/s ■ Command Center ■ Fast Boot ■ Live Update 5 ■ M-Flash

Software	■ Drivers ■ MSI - Command Center - Super Charger - Live Update 5 - Fast Boot ■ 7-ZIP ■ Sound Blaster Cinema ■ Killer Network Manager ■ Norton Internet Security Solution ■ Trend Micro SafeSync
Form Factor	■ M-ATX Form Factor ■ 9.6 in. x 9.6 in. (24.4 cm x 24.4 cm)



For the latest information about CPU, please visit
http://www.msi.com/service/cpu-support/



For more information on compatible components, please visit
http://www.msi.com/service/test-report/

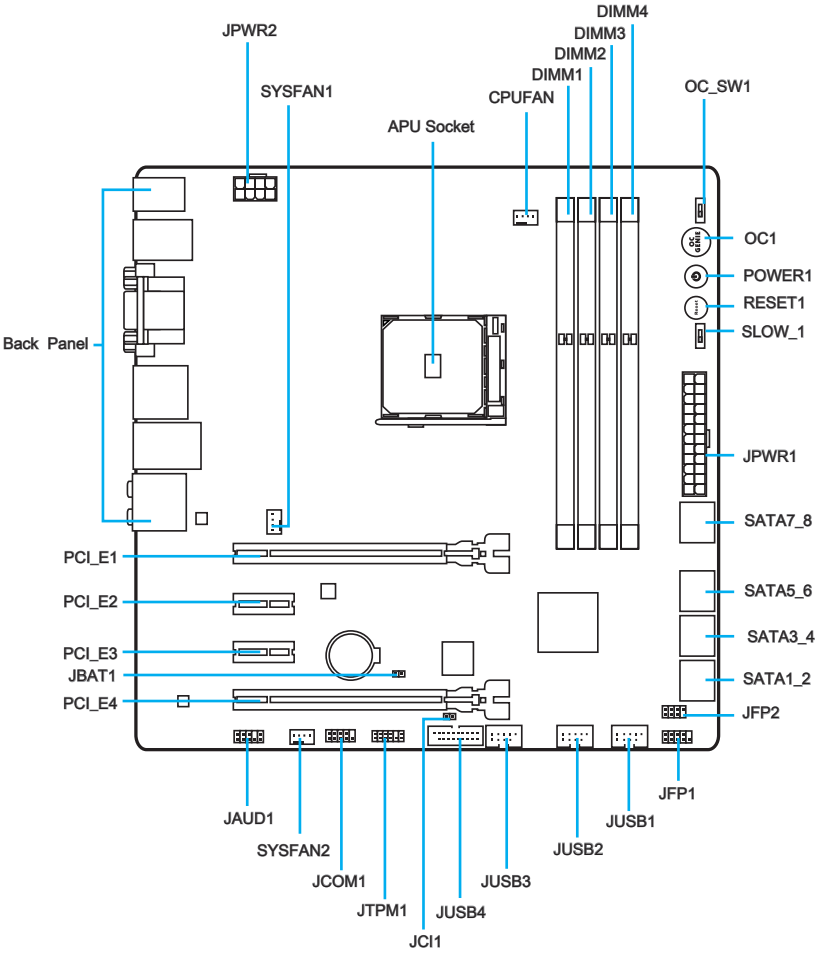
JPWR2
SYSFAN1
APU Socket
CPUFAN
DIMM4
DIMM3
DIMM2
DIMM1
OC_SW1
OC1
POWER1
RESET1
SLOW_1
Back Panel
JPWR1
SATA7_8
PCI_E1
SATA5_6
PCI_E2
SATA3_4
PCI_E3
JBAT1
SATA1_2
PCI_E4
JFP2
JFP1
JAUD1
JUSB1
SYSFAN2
JUSB2
JCOM1
JUSB3
JTPM1
JUSB4
JCI1

Connectors Reference Guide

Port Name	Port Type	Page
APU	FM2+/ FM2 Socket	1-11
Back Panel	I/O Ports	1-9
CPUFAN,SYSFAN1~2	Fan Power Connectors	1-22
JAUD1	Front Panel Audio Connector	1-26
JBAT1	Clear CMOS Jumper	1-27
JCI1	Chassis Intrusion Connector	1-25
JCOM1	Serial Port Connector	1-26
JFP1, JFP2	System Panel Connectors	1-23
JPWR1~2	ATX Power Connectors	1-16
JTPM1	TPM Module Connector	1-25
JUSB1 ~ 3	USB 2.0 Expansion Connectors	1-24
JUSB4	USB 3.0 Expansion Connector	1-24
OC_SW1	OC Genie Mode Switch	1-30
OC1	OC Genie Button	1-28
PCI_E1~4	PCIe Expansion Slots	1-17
POWER1	Power Button	1-29
RESET1	Reset Button	1-29
SATA1~8	SATA Connectors	1-21
SLOW_1	Slow Mode Booting Switch	1-30

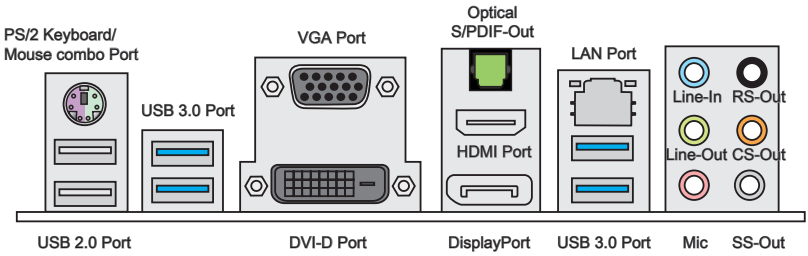

▸**PS/2 Keyboard/ Mouse combo Port**

The PS/2® keyboard/ mouse DIN connector for PS/2® keyboard/ mouse.

▸**USB 3.0 Port**

USB 3.0 port is backward-compatible with USB 2.0 devices. It supports data transfer rate up to 5 Gbit/s (SuperSpeed).

Important

In order to use USB 3.0 devices, you must connect to a USB 3.0 port. If a USB cable is used, it must be USB 3.0 compliant.

▸**USB 2.0 Port**

The USB 2.0 port is for attaching USB 2.0 devices such as keyboard, mouse, or other USB 2.0-compatible devices.

▸**VGA Port**

The DB15-pin female connector is provided for monitor.

▸**DVI-D Port**

The DVI-D (Digital Visual Interface- Digital) connector can be connected to a LCD monitor, or a CRT monitor with an adapter. To connect a monitor, please refer to the monitor's manual for more information.

▸**HDMI Port** HDMI HIGH-DEFINITION MULTIMEDIA INTERFACE

The High-Definition Multimedia Interface (HDMI) is an all-digital audio-video interface that is capable of transmitting uncompressed streams. HDMI supports all types of TV formats, including standard, enhanced, or high-definition video, plus multi-channel digital audio on a single cable.

▸**DisplayPort**

DisplayPort is a digital display interface standard. This connector is used to connect a monitor with DisplayPort inputs.

Important

The DisplayPort does not support "Hot-plug". Therefore, please make sure that the computer is off before connecting to or disconnecting from the DisplayPort.

Important

This platform supports dual-display and triple-display function.

	VGA + DVI-D / VGA + HDMI / DVI-D + HDMI / DVI-D + DisplayPort / HDMI + DisplayPort	VGA + DVI-D + HDMI / DVI-D + HDMI + DisplayPort
Extend mode (Extend the desktop to the second and third monitor)	○	○
Clone mode (Monitors have the same screen)	○	○

▸Optical S/PDIF-Out

This S/PDIF (Sony & Philips Digital Interconnect Format) connector is provided for digital audio transmission to external speakers through an optical fiber cable.

▸LAN Port

The standard RJ-45 LAN jack is for connecting to a Local Area Network (LAN).

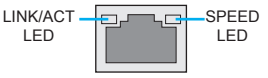

LED	LED Status	Description
Link/ Activity LED	Off	No link
	Yellow	Linked
	Blinking	Data activity
Speed LED	Off	10 Mbps connection
	Green	100 Mbps connection
	Orange	1 Gbps connection

▸Audio Ports

These connectors are used for audio devices. The color of the jack refers to the function of the connector.

- Blue-Line in: Used for connecting external audio outputting devices.
- Green- Line out: Used as a connector for speakers or headphone.
- Pink- Mic: Used as a connector for a microphone.
- Black- RS-Out: Rear surround sound line out in 4/ 5.1/ 7.1 channel mode.
- Orange- CS-Out: Center/ subwoofer line out in 5.1/ 7.1 channel mode.
- Gray- SS-Out: Side surround sound line out in 7.1 channel mode.

Introduction to FM2/ FM2+ APU

The surface of the FM2/ FM2+ APU has a golden triangle to assist in correctly lining up the APU for motherboard placement. The golden triangle is the Pin 1 indicator.



Golden triangle is the Pin 1 indicator

Important

Overheating

Overheating can seriously damage the APU and motherboard. Always make sure the cooling fans work properly to protect the APU from overheating. Be sure to apply an even layer of thermal paste (or thermal tape) between the APU and the heatsink to enhance heat dissipation.

Replacing the APU

When replacing the APU, always turn off the system's power supply and unplug the power supply's power cord to ensure the safety of the APU.

Overclocking

This motherboard is designed to support overclocking. Before attempting to overclock, please make sure that all other system components can tolerate overclocking. Any attempt to operate beyond product specifications is not recommend. MSI does not guarantee the damages or risks caused by inadequate operation beyond product specifications.

APU & Cooler Installation

When you are installing the APU, **make sure the APU has a cooler attached on the top to prevent overheating**. Meanwhile, do not forget to apply some thermal paste on APU before installing the heat sink/cooler fan for better heat dispersion.

Follow the steps below to install the APU & cooler correctly. Wrong installation will cause the damage of your APU & motherboard.

1. Pull the lever sideways away from the socket. Make sure to raise the lever up to a 90-degree angle.
2. Look for the gold arrow of the APU. The gold arrow should point as shown in the picture. The APU can only fit in the correct orientation.

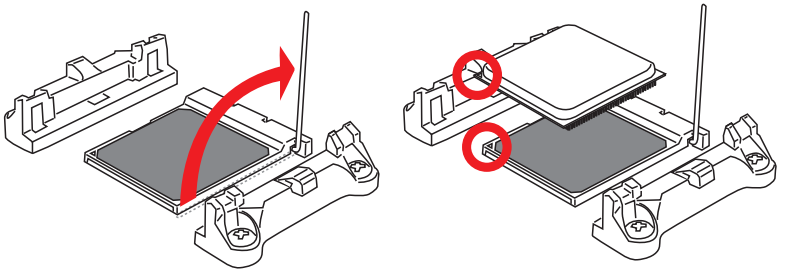

3. If the APU is correctly installed, the pins should be completely embedded into the socket and can not be seen. Please note that any violation of the correct installation procedures may cause permanent damages to your motherboard.
4. Press the APU down firmly into the socket and close the lever. As the APU is likely to move while the lever is being closed, always close the lever with your fingers pressing tightly on top of the APU to make sure the APU is properly and completely embedded into the socket.

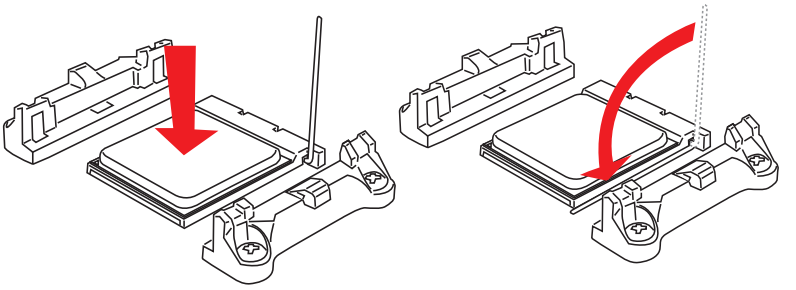

5. Locate the APU fan connector on the motherboard.
6. Position the cooling set onto the retention mechanism. Hook one end of the clip to hook first.

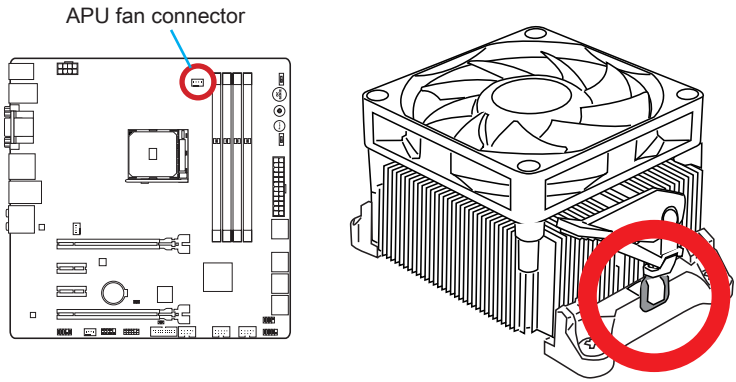

7. Then press down the other end of the clip to fasten the cooling set on the top of the retention mechanism. Locate the Fix Lever and lift up it.
8. Fasten down the lever.
9. Attach the APU Fan cable to the APU fan connector on the motherboard.

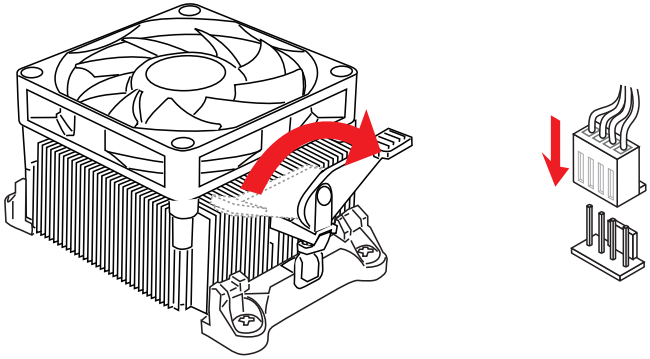

Important

- *While disconnecting the Safety Hook from the fixed bolt, it is necessary to keep an eye on your fingers, because once the Safety Hook is disconnected from the fixed bolt, the fixed lever will spring back instantly.*
- *Confirm that the APU cooler has formed a tight seal with the APU before booting your system.*
- *Please refer to the documentation in the APU cooler package for more details about APU cooler installation.*

Memory

These DIMM slots are used for installing memory modules. For more information on compatible components, please visit http://www.msi.com/service/test-report/

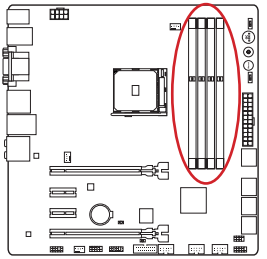

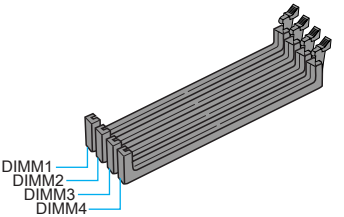

Video Demonstration

Watch the video to learn how to install memories at the address below.
http://youtu.be/76yLtJaKICQ

Dual-Channel mode Population Rule

In Dual-Channel mode, the memory modules can transmit and receive data with two data bus channels simultaneously. Enabling Dual-Channel mode can enhance system performance. The following illustrations explain the population rules for Dual-Channel mode.

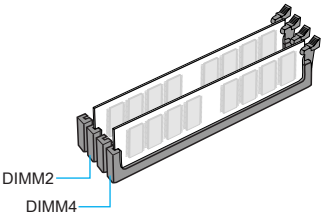

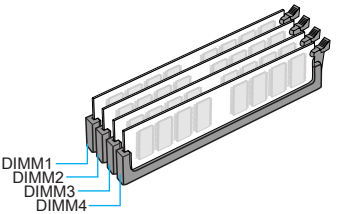

Important

- *DDR3 memory modules are not interchangeable with DDR2, and the DDR3 standard is not backward compatible. Always install DDR3 memory modules in DDR3 DIMM slots.*
- *To ensure system stability, memory modules must be of the same type and density in Dual-Channel mode.*
- *Due to chipset resource usage, the system will only detect up to 63+ GB of memory (not full 64 GB) when all DIMM slots have 16GB memory modules installed.*

Mounting Screw Holes

When installing the motherboard, first install the necessary mounting stands required for an motherboard on the mounting plate in your computer case. If there is an I/O back plate that came with the computer case, please replace it with the I/O backplate that came with the motherboard package. The I/O backplate should snap easily into the computer case without the need for any screws. Align the mounting plate's mounting stands with the screw holes on the motherboard and secure the motherboard with the screws provided with your computer case. The locations of the screw holes on the motherboard are shown below. For more information, please refer to the manual that came with the computer case.

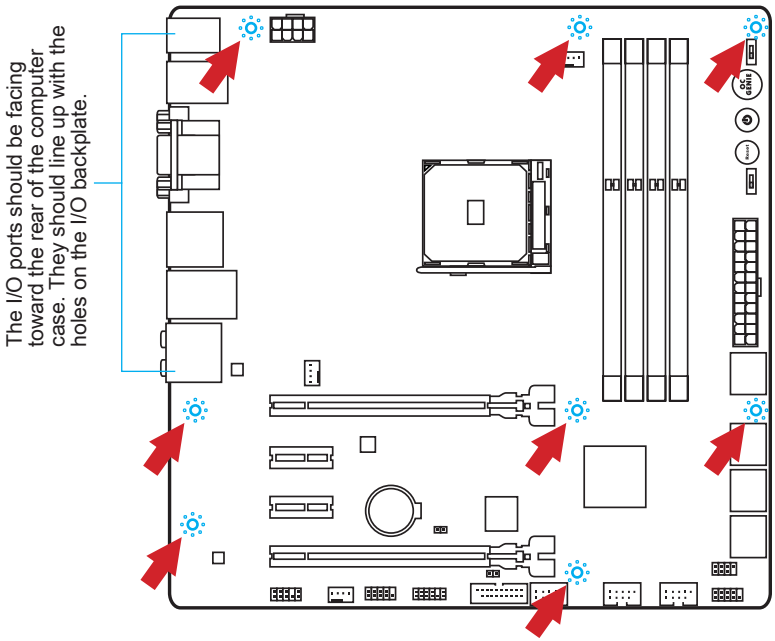

Important

- *Install the motherboard on a flat surface free from unnecessary debris.*
- *To prevent damage to the motherboard, any contact between the motherboard circuitry and the computer case, except for the mounting stands, is prohibited.*
- *Please make sure there are no loose metal components on the motherboard or within the computer case that may cause a short circuit of the motherboard.*

Power Supply

Video Demonstration

Watch the video to learn how to install power supply connectors.
http://youtu.be/gkDYyR_83l4

JPWR1~2: ATX Power Connectors

These connectors allow you to connect an ATX power supply. To connect the ATX power supply, align the power supply cable with the connector and firmly press the cable into the connector. If done correctly, the clip on the power cable should be hooked on the motherboard's power connector.

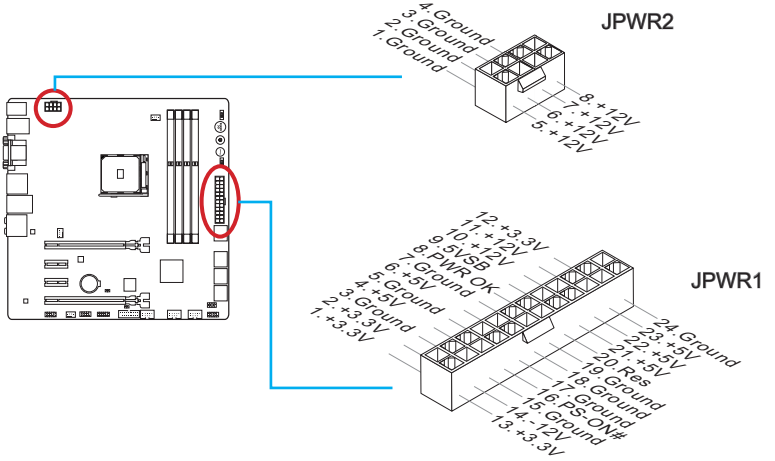

Important

Make sure that all the power cables are securely connected to a proper ATX power supply to ensure stable operation of the motherboard.

Expansion Slots

This motherboard contains numerous slots for expansion cards, such as discrete graphics or audio cards.

PCI_E1~4: PCIe Expansion Slots

The PCIe slot supports the PCIe interface expansion card.

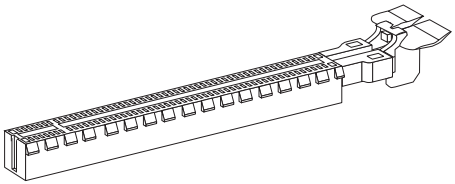

PCIe x16 Slot

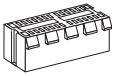

PCIe 2.0 x1 Slot

Important

When adding or removing expansion cards, always turn off the power supply and unplug the power supply power cable from the power outlet. Read the expansion card's documentation to check for any necessary additional hardware or software changes.

Video/ Graphics Cards

If available, this motherboard takes advantage of the CPU's integrate graphics processor, but discrete video cards can be installed by way of the motherboard's expansion slots. Adding on one or more discrete video cards will significantly boost the system's graphics performance. For best compatibility, MSI graphics cards are recommended.

Video Demonstration

Watch the video to learn how to install a graphics card on PCIe x16 slot with butterfly lock.

http://youtu.be/mG0GZpr9w_A

Single Video Card Installation

1. Determine what type of expansion slot(s) the video card will use. Locate the expansion slot(s) on the motherboard. Remove any protective expansion slot covers from the computer case.
2. Line up the video card on top of the expansion slot(s) with the display ports facing out of the computer case. For a single video card installation, using the PCI_E1 slot is recommended.
3. Push the video card into its expansion slot(s). Depending on the expansion slot(s) used, there should be clip(s) on the expansion slot(s) that will lock in place.
4. If needed, screw the edge of the graphics card to the computer case. Some video cards might require a power cable directly from the power supply.
5. Please consult your video card's manual for further instructions regarding driver installation or other special settings.

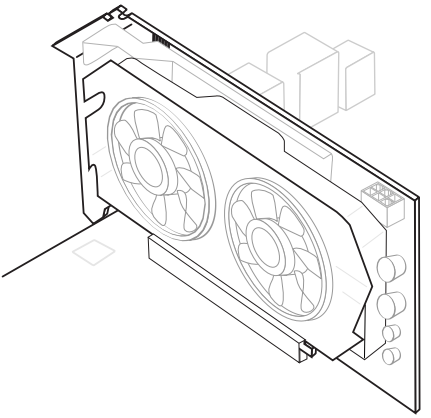

AMD CrossFire™ (Multi-GPU) Technology

AMD CrossFire™ is a multi-GPU performance gaming platform. By linking together two or more discrete GPUs, CrossFire™ can significant improve system graphics performance. It allows the ability to scale a system's graphics power as needed, making it the most scalable gaming platform. This motherboard will automatically detect CrossFire™ technology and make changes in the BIOS as needed. Follow the instructions below to ensure a successful two-way CrossFire™ installation.

1. Install two AMD Radeon™ HD graphics cards into the PCI_E1 & PCI_E4 expansion slots.
2. With the two cards installed, an optional CrossFire™ Video Link cable is required to connect the graphics cards. Attach one side of the cable on each of the cards by way of the metal contacts (please refer to the picture below). Please note that although two graphics cards have been installed, only the display ports on the graphics card installed in the first PCIe x16 slot will work. All displays should be connected to this graphics card.

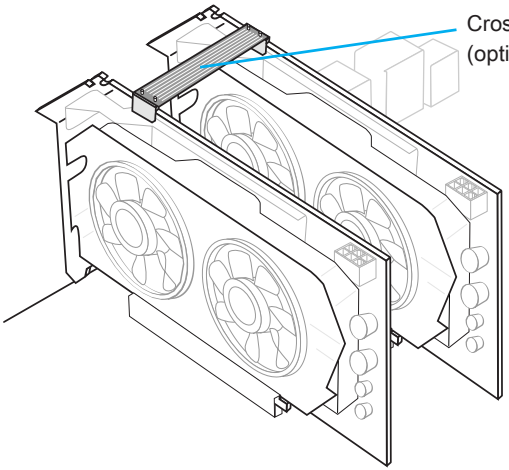

Important

- *Please ensure that all graphics cards used in CrossFire™ mode are of the same brand and specifications. For best compatibility with the motherboard, MSI graphics cards are recommended.*
- *Make sure to connect an adequate power supply to the power connectors on the graphics cards to ensure stable operation.*

3. Boot up the computer and install the drivers and software included in your video card package. For more information, please refer to the manual that came with your video card.
4. After all of the hardware and software has been properly installed, reboot the system. After entering the operating system (OS), right click on the desktop and choose the “Catalyst Control Center”.

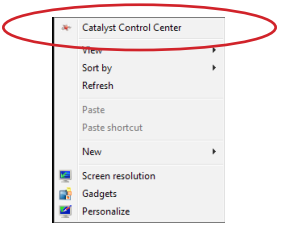

5. The CrossFire™ setting must be enabled to allow CrossFire™ mode to operate. The follow screen appears in the Catalyst Control Center. Depending on your operating system, the screen may look different.

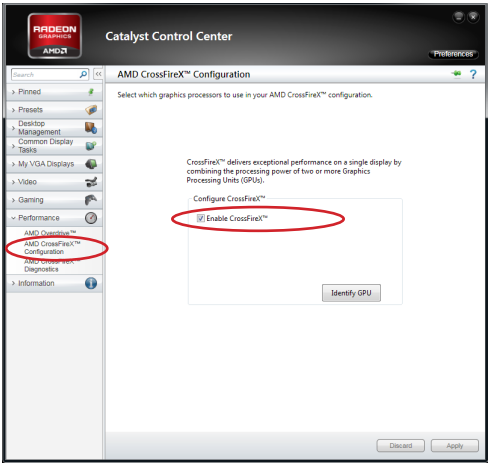

Important

A CrossFire™ system has four possible display modes:

- *SuperTiling*
- *Scissor Mode*
- *Alternate Frame Rendering*
- *Super Anti-aliasing.*

For more details, please consult the graphics card manual.

SATA1~8: SATA Connectors

This connector is a high-speed SATA interface port. Each connector can connect to one SATA device. SATA devices include disk drives (HDD), solid state drives (SSD), and optical drives (CD/ DVD/ Blu-Ray).

Video Demonstration

Watch the video to learn how to Install SATA HDD.
http://youtu.be/RZsMpqxythc

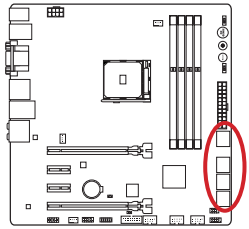

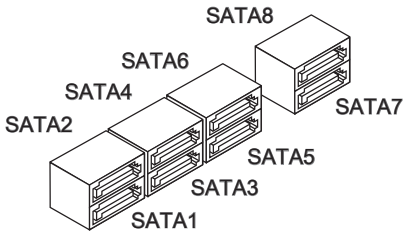

Important

- *Many SATA devices also need a power cable from the power supply. Such devices include disk drives (HDD), solid state drives (SSD), and optical drives (CD / DVD / Blu-Ray). Please refer to the device's manual for further information.*
- *Many computer cases also require that large SATA devices, such as HDDs, SSDs, and optical drives, be screwed down into the case. Refer to the manual that came with your computer case or your SATA device for further installation instructions.*
- *Please do not fold the SATA cable at a 90-degree angle. Data loss may result during transmission otherwise.*
- *SATA cables have identical plugs on either sides of the cable. However, it is recommended that the flat connector be connected to the motherboard for space saving purposes.*

CPUFAN,SYSFAN1~2: Fan Power Connectors

The fan power connectors support system cooling fans with +12V. If the motherboard has a System Hardware Monitor chipset on-board, you must use a specially designed fan with a speed sensor to take advantage of the CPU fan control. Remember to connect all system fans. Some system fans may not connect to the motherboard and will instead connect to the power supply directly. A system fan can be plugged into any available system fan connector.

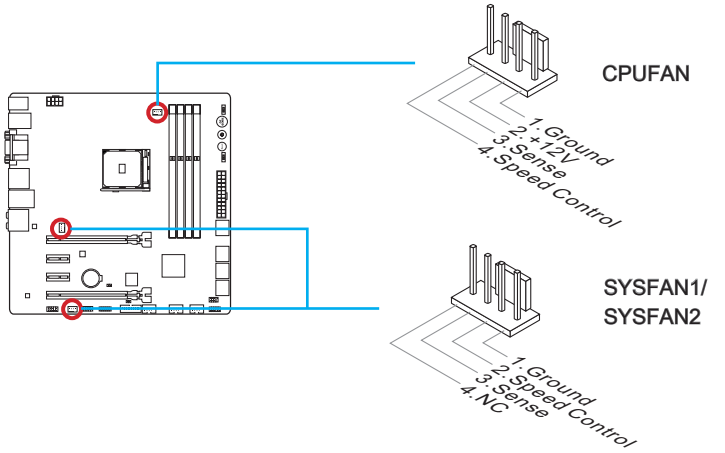

Important

- *Please refer to your processor's official website or consult your vendor to find recommended CPU heatsink.*
- *These connectors support Smart Fan Control with liner mode. The Command Center utility can be installed to automatically control the fan speeds according to the CPU's and system's temperature.*
- *If there are not enough ports on the motherboard to connect all system fans, adapters are available to connect a fan directly to a power supply.*
- *Before first boot up, ensure that there are no cables impeding any fan blades.*

JFP1, JFP2: System Panel Connectors

These connectors connect to the front panel switches and LEDs. When installing the front panel connectors, please use the optional M-Connector to simplify installation. Plug all the wires from the computer case into the M-Connector and then plug the M-Connector into the motherboard.

Video Demonstration

Watch the video to learn how to Install front panel connectors.
http://youtu.be/DPELIdVNZUI

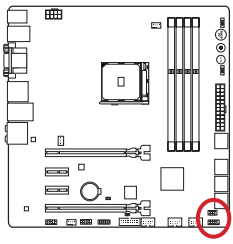

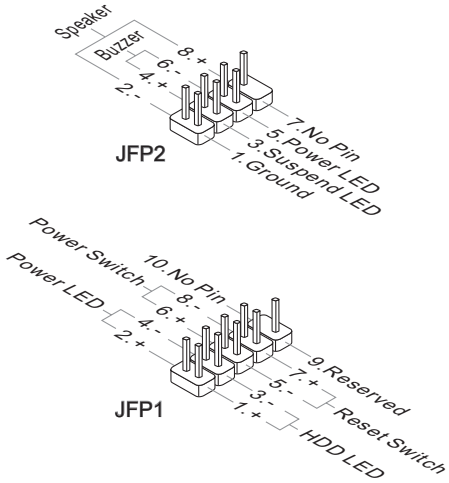

Important

- *On the connectors coming from the case, pins marked by small triangles are positive wires. Please use the diagrams above and the writing on the optional M-Connectors to determine correct connector orientation and placement.*
- *The majority of the computer case's front panel connectors will primarily be plugged into JFP1.*

JUSB1 ~ 3: USB 2.0 Expansion Connectors

This connector is designed for connecting high-speed USB peripherals such as USB HDDs, digital cameras, MP3 players, printers, modems, and many others.

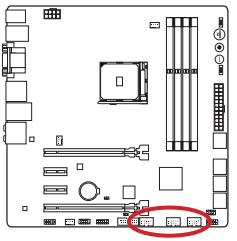

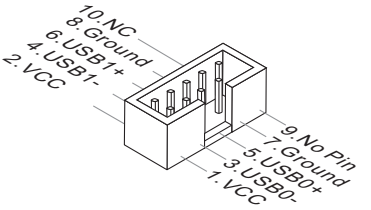

Important

Note that the VCC and GND pins must be connected correctly to avoid possible damage.

JUSB4: USB 3.0 Expansion Connector

The USB 3.0 port is backwards compatible with USB 2.0 devices. It supports data transfer rates up to 5Gbits/s (SuperSpeed).

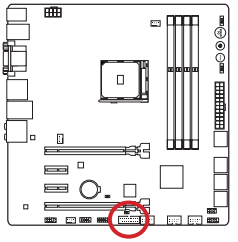

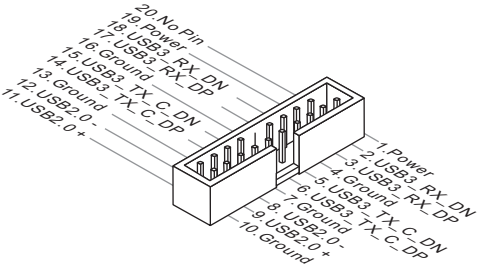

Important

- *Note that the VCC and GND pins must be connected correctly to avoid possible damage.*
- *To use a USB 3.0 device, you must connect the device to a USB 3.0 port through an optional USB 3.0 compliant cable.*

JCI1: Chassis Intrusion Connector

This connector connects to the chassis intrusion switch cable. If the computer case is opened, the chassis intrusion mechanism will be activated. The system will record this intrusion and a warning message will flash on screen. To clear the warning, you must enter the BIOS utility and clear the record.

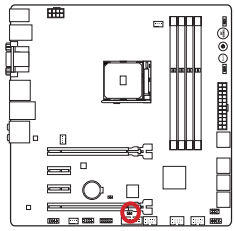

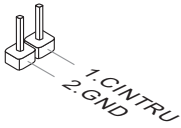

JTPM1: TPM Module Connector

This connector connects to a TPM (Trusted Platform Module). Please refer to the TPM security platform manual for more details and usages.

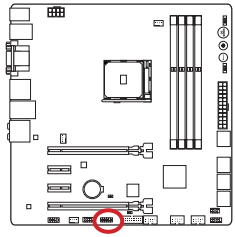

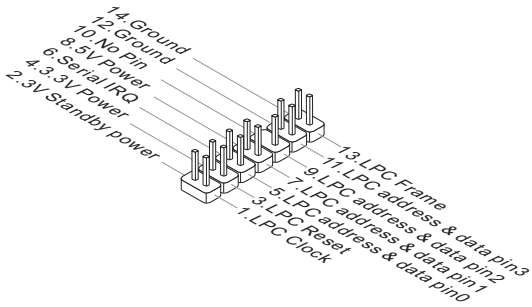

JCOM1: Serial Port Connector

This connector is a 16550A high speed communication port that sends/receives 16 bytes FIFOs. You can attach a serial device.

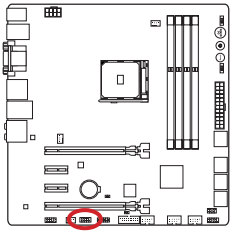

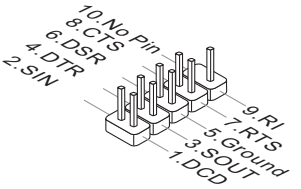

JAUD1: Front Panel Audio Connector

This connector allows you to connect the front audio panel located on your computer case.

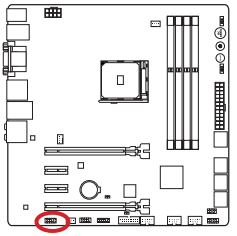

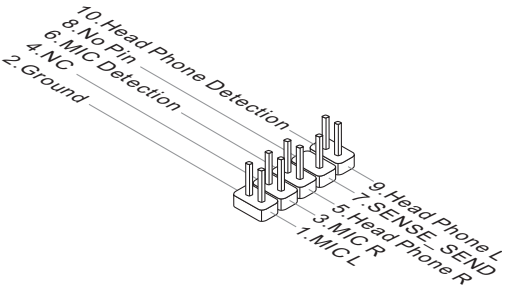

Jumper

JBAT1: Clear CMOS Jumper

There is CMOS RAM onboard that is external powered from a battery located on the motherboard to save system configuration data. With the CMOS RAM, the system can automatically boot into the operating system (OS) every time it is turned on. If you want to clear the system configuration, set the jumpers to clear the CMOS RAM.

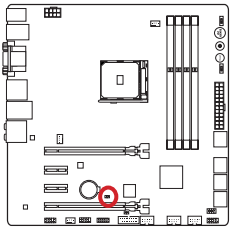



Keep Data



Clear Data

Important

You can clear the CMOS RAM by shorting this jumper while the system is off. Afterwards, open the jumper . Do not clear the CMOS RAM while the system is on because it will damage the motherboard.

Buttons & Switches

The motherboard has numerous on-board buttons to control various functions. This section will explain how to change your motherboard's functions through the use of these on-board buttons.

OC1: OC Genie Button

This button is used to automatically overclock the system. To enable OC Genie, Set this button to ON while the system is in power off mode. On the next boot, the processor will be automatically overclock for optimal performance. To disable OC Genie, Set this button to OFF while the system is in power off mode and the configuration parameters will return to its normal values.

Video Demonstration

Watch the video to learn how to use the OC Genie button.
http://youtu.be/nIpRvWkUazg

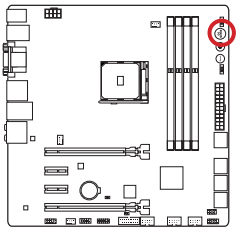



On



Off

Important

- *This motherboard provides two ways to enable OC Genie: press the physical OC Genie button on the motherboard, or click the virtual OC Genie button in BIOS. You can specify how OC Genie to be enabled by using the "OC Genie Function Control" item in BIOS.*
- *Please install DDR3 1333 or faster memory and equip a better heatsink/cooler to use the OC Genie function.*
- *We do not guarantee the OC Genie overclocking range or the damages/risks caused by overclocking behavior.*
- *It is possible to disable the OC Genie function in the BIOS setup. Please refer to the BIOS section of the manual for instructions on how to turn off OC Genie from the BIOS.*
- *The usage of OC Genie is at the user's own risk. Overclocking is never guaranteed by MSI.*
- *To ensure successfully OC Genie usage, MSI components are recommended.*

POWER1: Power Button

This button is used to turn-on and turn-off the system. Press the button once to turn-on or turn-off the system.

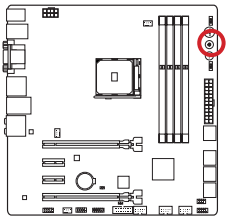



RESET1: Reset Button

This reset button is used to reset the system. Press the button to reset the system.

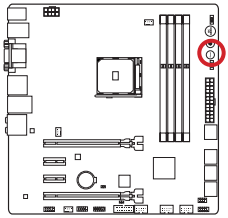



OC_SW1: OC Genie Mode Switch

This swtich provides two overclocking modes (Gear 1 and Gear 2) for OC Genie operation. When you press the OC Genie button, the overclocking procedure will be performed according to the setting of this switch. The Gear 1 mode is the default setting. The Gear 2 mode allows the OC Genie function to overclock the CPU/ system frequency higher then Gear 1.

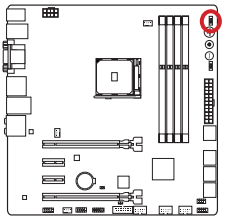

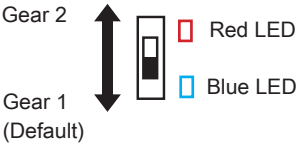

SLOW_1: Slow Mode Booting Switch

This switch is used for LN2 cooling solution, that provides the extreme overclocking conditions, to boot at a stable processor frequency and to prevent the system from crashing.

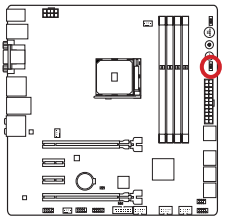

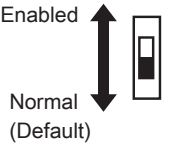

Important

Users will try extreme low temperature overclocking at their own risks. The overclocking results will vary according to the CPU version.

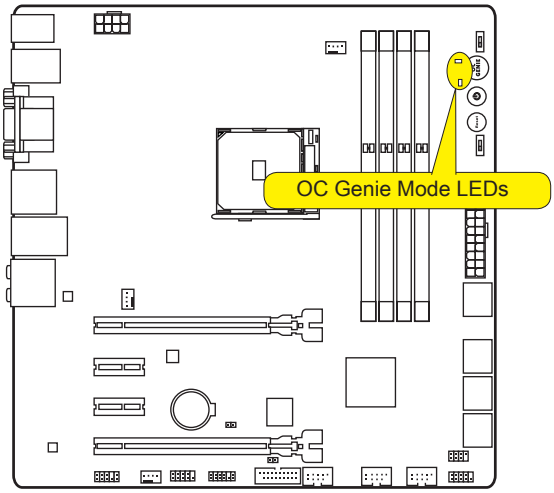

OC Genie Mode LEDs

These LEDs are used to indicate OC Genie operation mode.
When the bottom LED lights blue, the OC Genie operation mode is Gear 1.
When the top LED lights red, the OC Genie operation mode is Gear 2.

Drivers and Utilities

After you install the operating system you will need to install drivers to maximize the performance of the new computer you just built. MSI mainbaord comes with a Driver Disc. Drivers allow the computer to utilize your motherboard more efficiently and take advantage of any special features we provide.

You can protect your computer from viruses by installing the bundled security program. The bundle also includes a variety of powerful and creative utilities.

Total Installer

Total Installer is very easy to use and does a great job of finding necessary drivers. Please follow the steps below to install drivers and utilities for your new computer.

1. Insert MSI Driver Disc into the optical drive. The setup screen will automatically appear if autorun is enabled in OS.
2. Click Total Installer. A popup dialog will appear listing all necessary drivers.



3. Select all checkbox on driver listing dialogue.
4. Click **Install** button.
5. The software installation will then be in progress, after it has finished it will prompt you to restart.
6. Click **OK** button to finish.
7. Restart your computer.

You can also use the same method to install the utilities.

Chapter 2

Quick Installation

This chapter provides demonstration diagrams about how to install your computer. Some of the installations also provide video demonstrations. Please link to the URL to watch it with the web browser on your phone or tablet. You may have even link to the URL by scanning the QR code.



Important

The diagrams in this chapter are for reference only and may vary from the product you purchased.

APU Installation

1

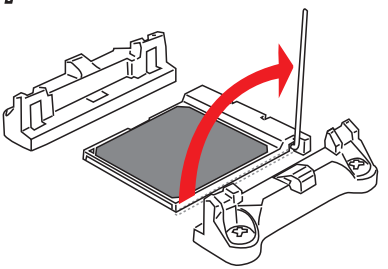

2

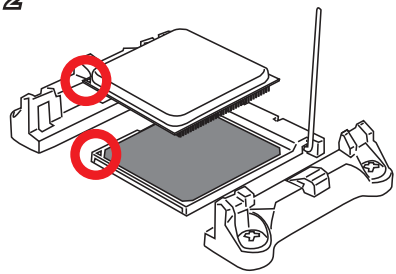

3

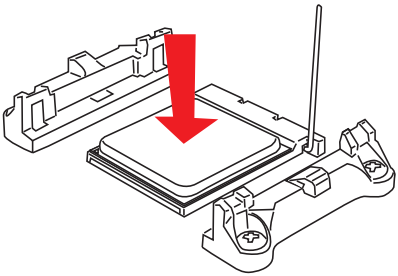

4

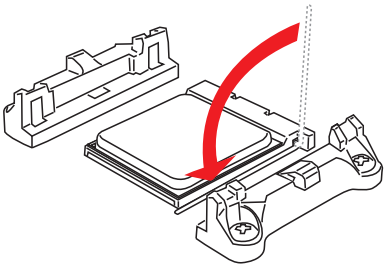

5

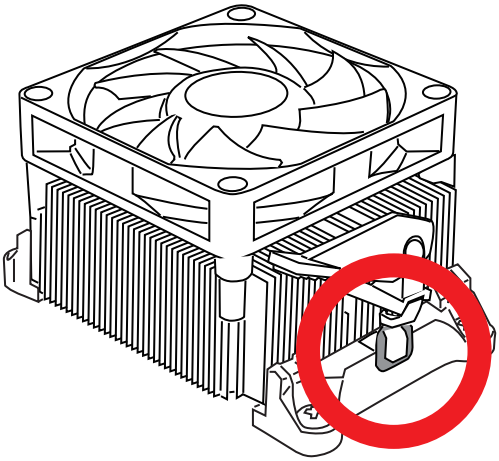

6

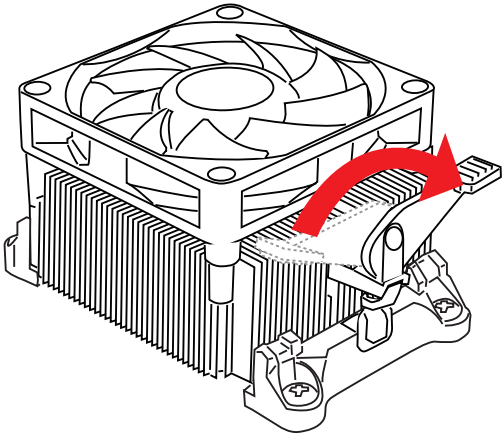

7

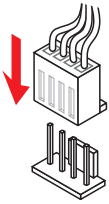

http://youtu.be/76yLtJaKlCQ

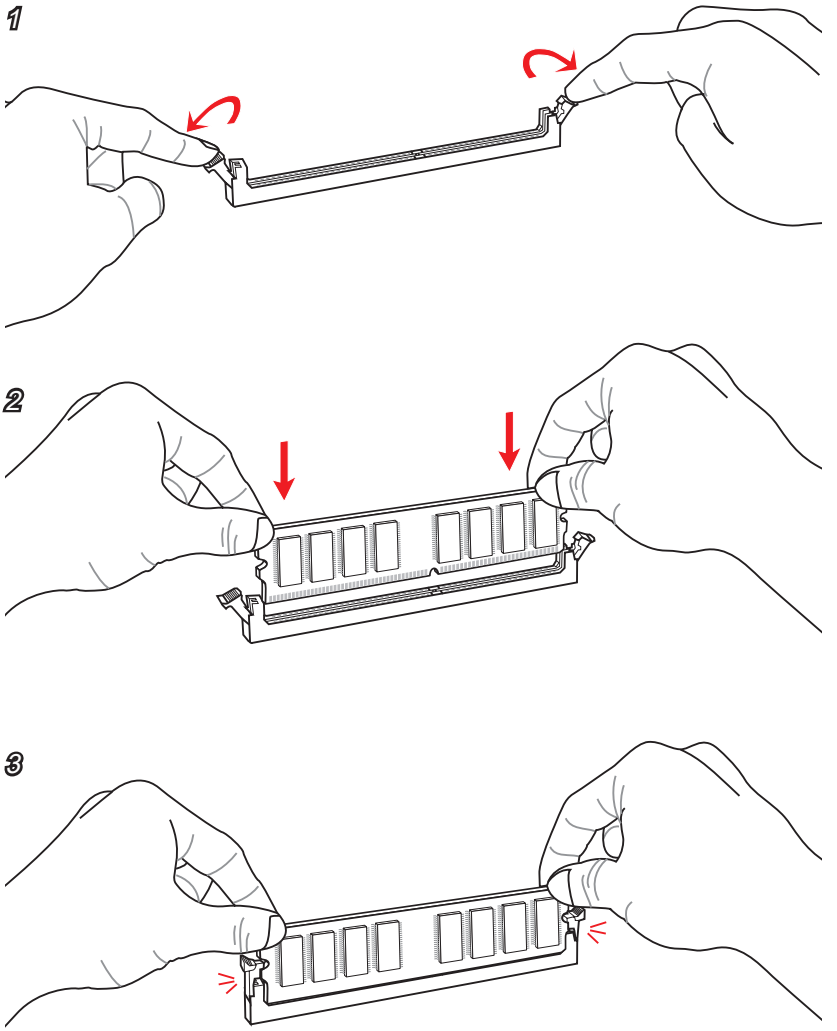

1

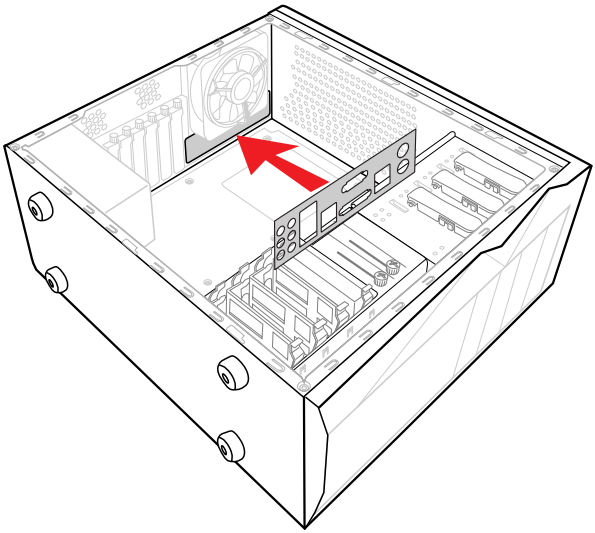

2

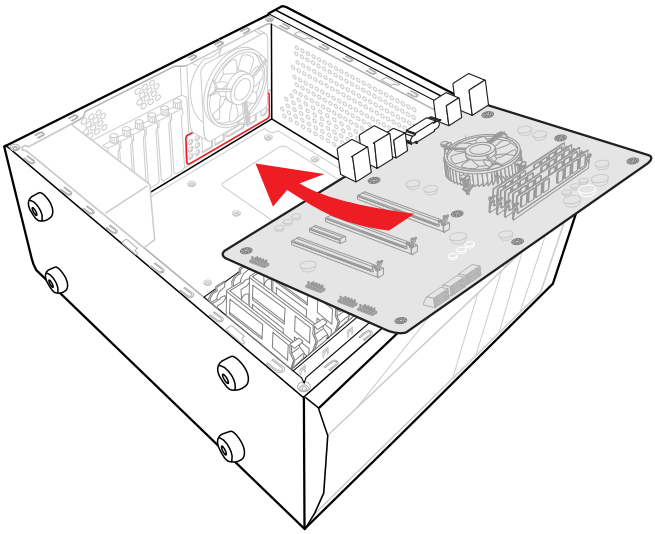

3

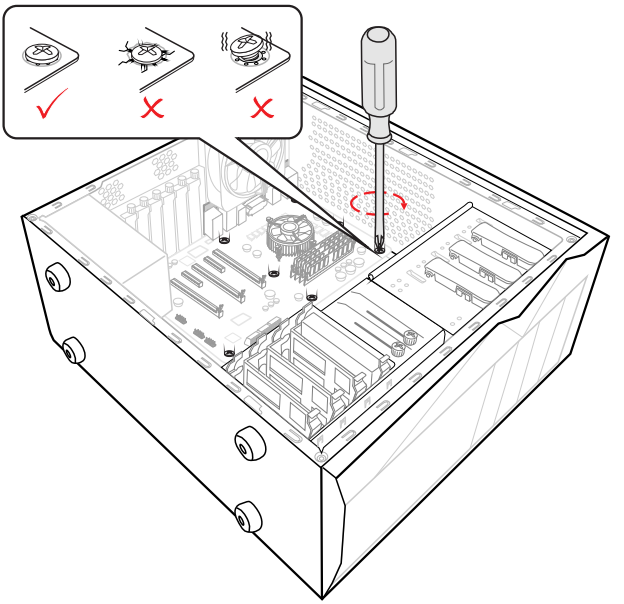

1

http://youtu.be/gkDYyR_83l4

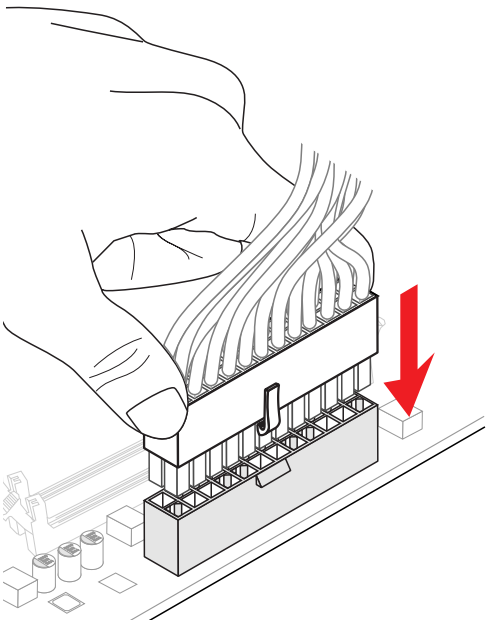

2

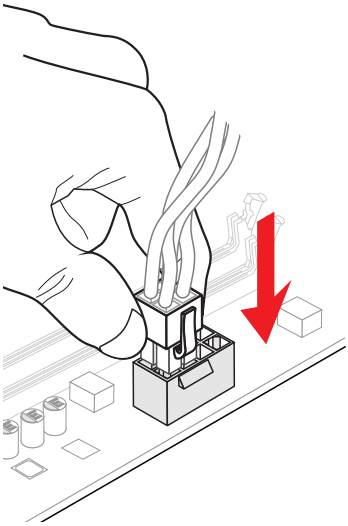

or

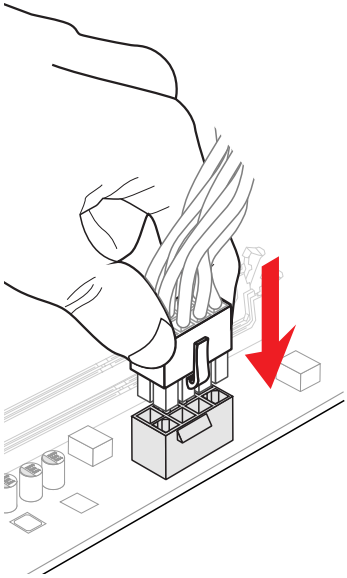

3

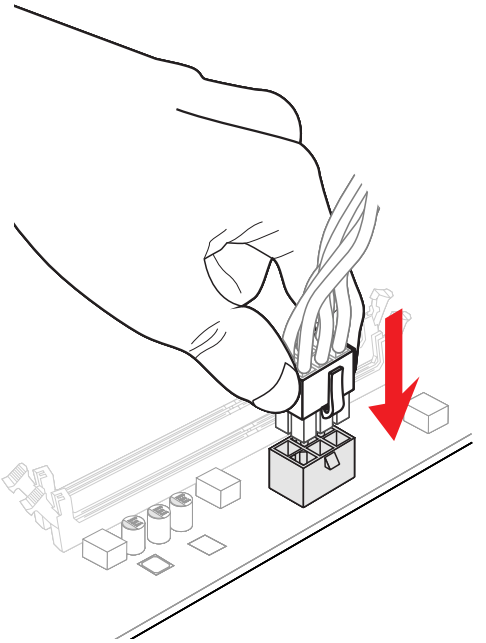

http://youtu.be/RZsMpqxythc

1

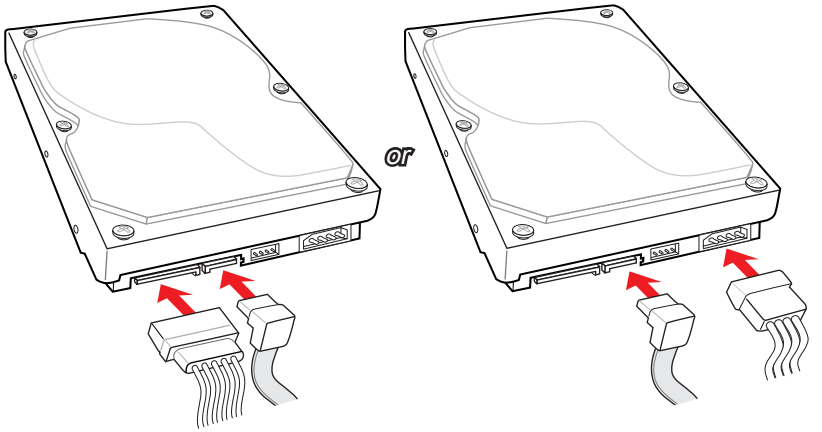

2

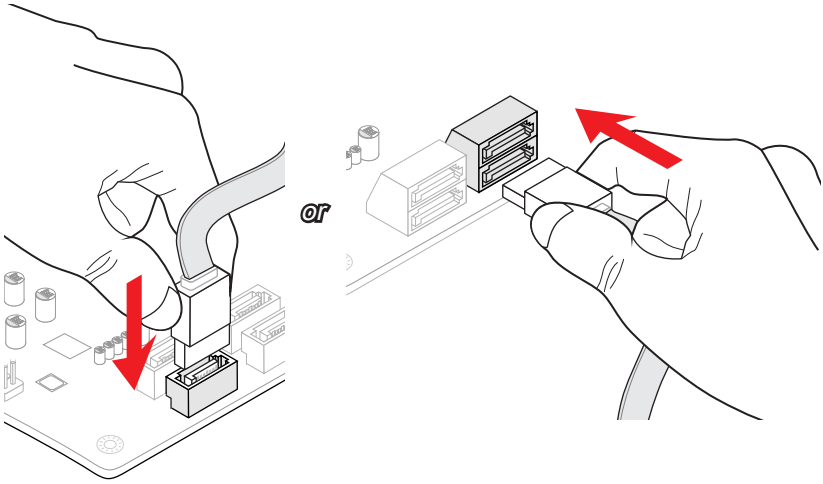

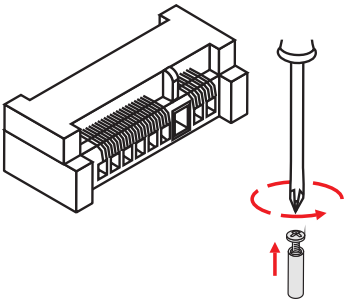

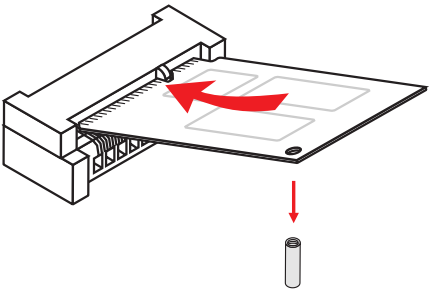

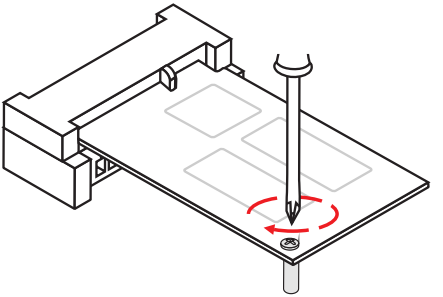

JFP1 Connector Installation

http://youtu.be/DPELIdVNZUI

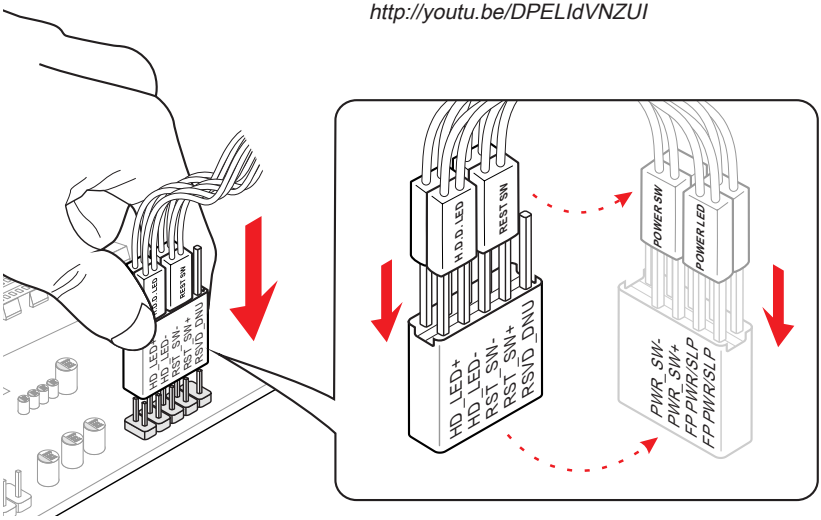

Front Panel Audio Connector Installation

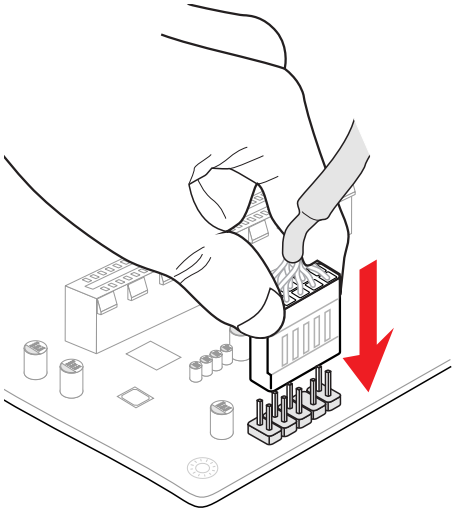

USB2.0 Connector Installation

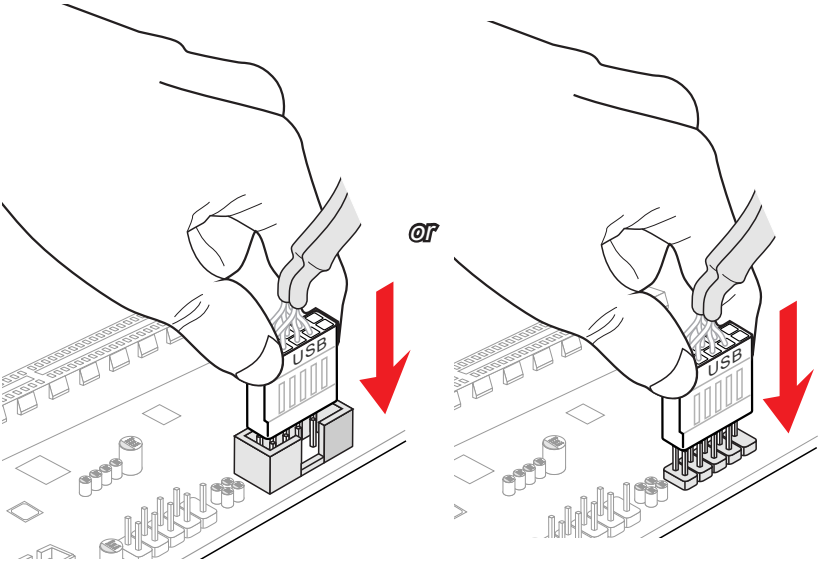

USB3.0 Connector Installation

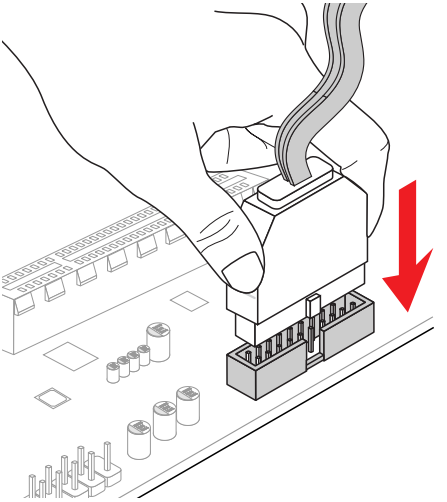

http://youtu.be/mG0GZpr9w_A

1

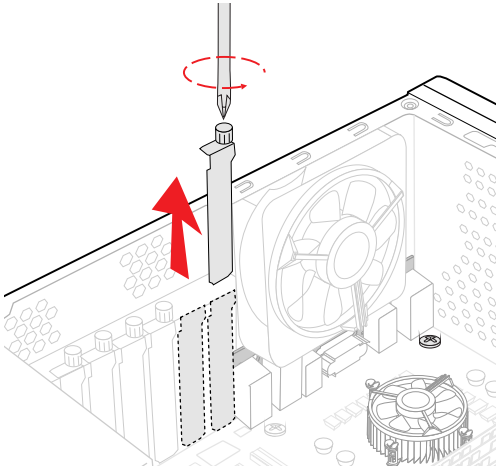

2

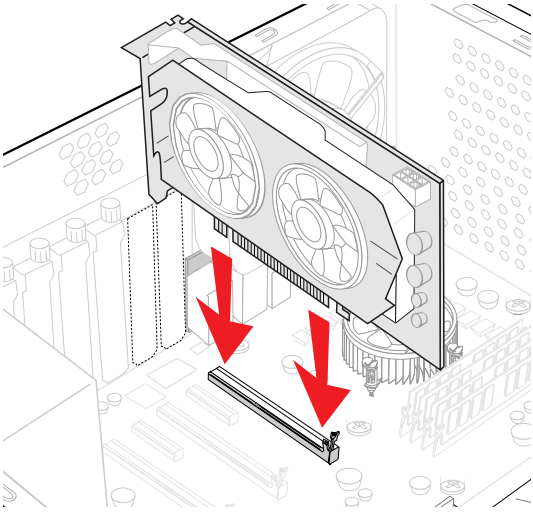

3

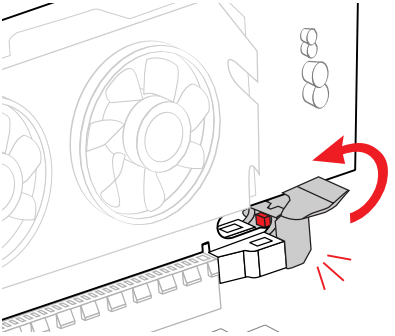

4

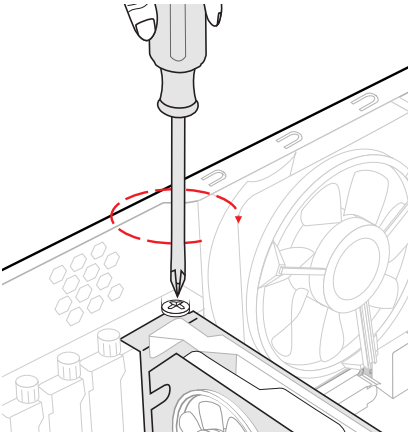

5

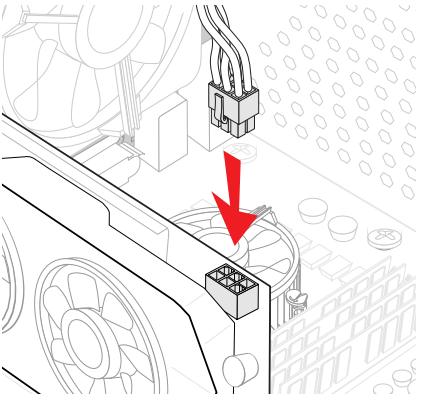

Chapter 3

BIOS Setup

CLICK BIOS is a revolutionary UEFI interface that allows you to setup and configure your system for optimum use. Using your mouse and keyboard, users can change BIOS settings, monitor CPU temperature, select the boot device priority and view system information such as the CPU name, DRAM capacity, the OS version and the BIOS version. Users can import and export parameter data for backup or for sharing with friends.



- *The items under each BIOS category described in this chapter are under continuous update for better system performance. Therefore, the description may be slightly different from the latest BIOS and should be held for reference only.*
- *The pictures in this chpater are for reference only and may vary from the product you purchased. Please refer to the actual screens of your system for detailed information.*
- *Please clear the CMOS data and restore the default settings if the system becomes unbootable after changing BIOS settings. (Refer to the Clear CMOS jumper/ button section to clear the CMOS data, select the "Restore Defaults" and press <Enter> in BIOS to load the default settings.)*

Entering Setup

The default settings offer the optimal performance for system stability in normal conditions. You may need to run the Setup program when:

- An error message appears on the screen during the system booting up, and requests you to run SETUP.
- You want to change the default settings for customized features.

Important

- *Please load the default settings to restore the optimal system performance and stability if the system becomes unstable after changing BIOS settings. Select the "Restore Defaults" and press <Enter> in BIOS to load the default settings.*
- *Please clear the CMOS data and restore the default settings if the system becomes unbootable after changing BIOS settings. (Refer to the Clear CMOS jumper/ button section to clear the CMOS data, select the "Restore Defaults" and press <Enter> in BIOS to load the default settings.)*
- *If you are unfamiliar with the BIOS settings, we recommend that you keep the default settings to avoid possible system damage or failure booting due to inappropriate BIOS configuration.*

Entering BIOS Setup

Power on the computer and the system will start the Power On Self Test (POST) process. When the message below appears on the screen, please <DEL> key to enter BIOS:

Press DEL key to enter Setup Menu, F11 to enter Boot Menu

If the message disappears before you respond and you still need to enter BIOS, restart the system by turning the computer OFF then back ON or pressing the RESET button. You may also restart the system by simultaneously pressing <Ctrl>, <Alt>, and <Delete> keys.

MSI additionally provides two methods to enter the BIOS setup. You can click the “GO2BIOS” tab on “MSI Fast Boot” utility screen or press the physical “GO2BIOS" button (optional) on the motherboard to enable the system going to BIOS setup directly at next boot.



Click "GO2BIOS" tab on "MSI Fast Boot" utility screen.

Important

Please be sure to install the “MSI Fast Boot” utility before using it to enter the BIOS setup.

Overview

After entering BIOS, the following screen is displayed.

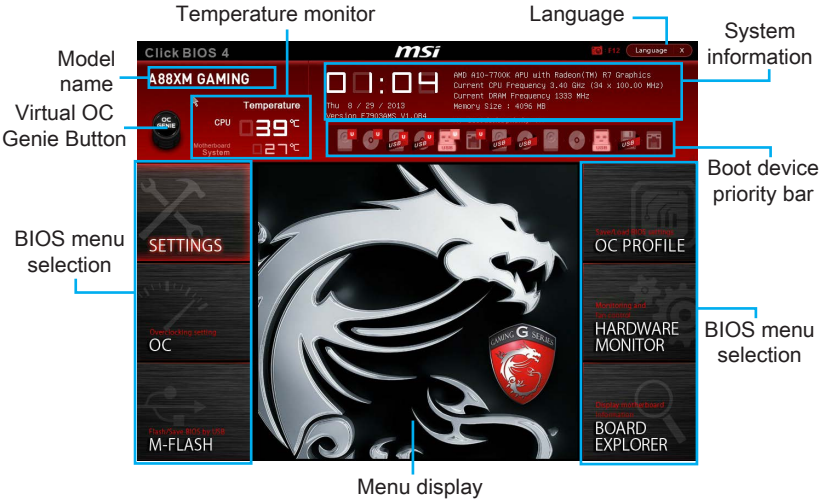

▸Temperature monitor

Shows the temperatures of the processor and the motherboard.

▸Language

Allows you to select the language of the BIOS setup.

▸System information

Shows the time, date, CPU name, CPU frequency, DRAM frequency, DRAM capacity and the BIOS version.

▸BIOS menu selection

The following options are available:

- **SETTINGS** - Uses this menu to specify the parameters for chipset and boot devices.
- **OC** - This menu contains the frequency and voltage adjustments. Increasing the frequency can get better performance, however high frequency and heat can cause instability, we do not recommend general users to overclock.
- **M-FLASH** - This menu provides the way to update BIOS with a USB flash disk.
- **OC PROFILE** -This menu is used to set various overclocking profiles.
- **HARDWARE MONITOR** - This menu is used to set the speeds of fans and monitor voltages of system.
- **BOARD EXPLORER** - It provides the information of the installed devices on the motherboard.

▶Boot device priority bar

You can move the device icons to change the boot priority.



▶Menu display

This area provides BIOS settings and information to be configured.

▶Virtual OC Genie Button

Enables or disables the OC Genie function by clicking on this button. When enabled, this button will be light. Enabling OC Genie function can automatically overclock with MSI optimized overclocking profile.

▶Model Name

Shows the model name of motherboard.

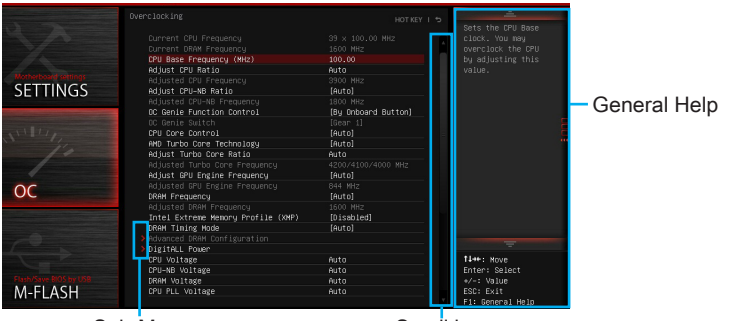

▶Sub-menu

If you find a point symbol to the left of certain items, that means a sub-menu can be launched for additional options. You can use the arrow keys or mouse to highlight the item and press <Enter> or double-click the left mouse button to enter the sub-menu.

▶Scroll bar

Slide the scroll bar or use the arrow keys to display the other items that are available on the "menu display" area.

▶General Help

The General Help displays a brief description to assist you in grasping the selected item.

Operation

You can control BIOS settings with the mouse and the keyboard. The following table lists and describes the hot keys and the mouse operations.

Hot key	Mouse	Description
<↑ ↓ → ← >	 Move the cursor	Select Item
<Enter>	 Click/ Double-click the left button	Select Icon/ Field
<Esc>	 Click the right button	Jump to the Exit menu or return to the previous from a submenu
<+>		Increase the numeric value or make changes
<->		Decrease the numeric value or make changes
<F1>		General Help
<F4>		CPU Specifications
<F5>		Enter Memory-Z
<F6>		Load optimized defaults
<F8>		OC Profile Load From USB
<F9>		OC Profile Save to USB
<F10>		Save Change and Reset
<F12>		Save a screenshot to a FAT/FAT32 USB drive



System Status

▸System Date

Sets the system date. Use tab key to switch between date elements.

The format is <day> <month> <date> <year>.

<day> Day of the week, from Sun to Sat, determined by BIOS. Read-only.

<month> The month from Jan. through Dec.

<date> The date from 1 to 31 can be keyed by numeric function keys.

<year> The year can be adjusted by users.

▸System Time

Sets the system time. Use tab key to switch between time elements.

The time format is <hour> <minute> <second>.

▸SATA Port

Show the information of connected SATA device.

Important

If the connected SATA device is not displayed, turn off computer and re-check SATA cable and power cable connections of the device and motherboard.

▸System Information

Shows detailed system information, including CPU type, BIOS version, and Memory (read only).

Advanced

▸**PCI Subsystem Settings**

Sets PCI Express interface protocol and latency timer. Press <Enter> to enter the sub-menu.

▸**PCI Latency Timer [32]**

Sets latency timer of PCI interface device.

[Options: 32, 64, 96, 128, 160, 192, 224, 248 PCI Bus clocks]

▸**ACPI Settings**

Sets ACPI parameters of onboard power LED behaviors. Press <Enter> to enter the sub-menu.

▸**Power LED [Blinking]**

Sets shining behaviors of the onboard Power LED.

[Dual Color] The power LED turns to another color to indicate the S3 state.

[Blinking] The power LED blinks to indicate the S3 state.

▸**Integrated Peripherals**

Sets integrated peripherals' parameters, such as LAN, HDD, USB and audio. Press <Enter> to enter the sub-menu.

▸**Onboard LAN Controller [Enabled]**

Enables or disables the onboard LAN controller.

▸**LAN Option ROM [Disabled]**

Enables or disables the legacy network Boot Option ROM for detailed settings. This item will appear when "Onboard LAN Controller" is enabled.

[Enabled] Enables the onboard LAN Boot ROM.

[Disabled] Disables the onboard LAN Boot ROM.

▸**Network Stack [Disabled]**

Sets UEFI network stack for optimizing IPv4 / IPv6 function.

[Enabled] Enables UEFI network stack.

[Disabled] Disables UEFI network stack.

▸**Ipv4 PXE Support [Enabled]**

When “Enabled”, the system UEFI network stack will support Ipv4 protocol. This item will appear when “Network Stack” is enabled.

[Enabled] Enables the Ipv4 PXE boot support.

[Disabled] Disables the Ipv4 PXE boot support.

▸**Ipv6 PXE Support [Enabled]**

When “Enabled”, the system UEFI network stack will support Ipv6 protocol. This item will appear when “Network Stack” is enabled.

[Enabled] Enables the Ipv6 PXE boot support.

[Disabled] Disables the Ipv6 PXE boot support.

▸SATA Mode [AHCI Mode]

Sets the operation mode of the onboard SATA controller. The default mode is AHCI.

[Disabled] Disables the SATA function.

[IDE Mode] Specify the IDE mode for SATA storage devices.

[AHCI Mode] Specify the AHCI mode for SATA storage devices. AHCI (Advanced Host Controller Interface) offers some advanced features to enhance the speed and performance of SATA storage device, such as Native Command Queuing (NCQ) and hot-plugging.

[RAID Mode] Enables RAID function for SATA storage devices.

▸SATAX Hot Plug [Disabled]

Allows user to enable or disable the SATA hot plug support. This item will appear when the “SATA Mode” set to [AHCI]/ [RAID].

[Enabled] Enables hot plug support for the SATA ports.

[Disabled] Disables hot plug support for the SATA ports.

▸HD Audio Controller [Enabled]

Enables or disables the onboard High Definition Audio controller.

▸HPET [Enabled]

Enables or disables the HPET (High Precision Event Timers) support.

▸Integrated Graphics Configuration

Adjusts integrated graphics settings for optimum system. Press <Enter> to enter the sub-menu.

▸Initiate Graphic Adapter [PEG]

Selects a graphics adapter as the primary display device.

[IGD] Integrated Graphics Display.

[PEG] PCI-Express Graphics Device.

▸Initiate Graphics Devices [Auto]

Enables or disables the integrated graphics controller.

[Auto] This setting will be configured automatically according to the installed APU.

[Disabled] Disables integrated graphics controller.

[Dual Graphics] Enables the integrated graphics controller multi-monitor support for independent graphics card.



The "Initiate Graphics Devices" must be set to "Dual Graphics" befor using AMD Dual Gaphics Technology.

▸Integrated Graphics Share Memory [Auto]

Selects a fixed amount of system memory allocated to the graphics. This item defines the exact memory size shared to the graphics. This item will appear when “Initiate Graphics Devices” is set to "Dual Graphics".

►USB Configuration

Sets the onboard USB controller and device function. Press <Enter> to enter the sub-menu.

►USB Controller [Enabled]

Enables or disables the onboard USB controller.

►XHCI Hand-off [Enabled]

Enables or disables XHCI hand-off support for the operating system without XHCI hand-off feature.

►EHCI Hand-off [Enabled]

Enables or disables EHCI hand-off support for the operating system without EHCI hand-off feature.

►Legacy USB Support [Enabled]

Sets Legacy USB function support.

[Auto] The system will automatically detect if any USB device is connected and enables or disables the legacy USB support.

[Enabled] Enable the USB support for legacy operating systems that do not support USB.

[Disabled] The USB devices are available only for UEFI applications.

►Onboard USB3.0 Controller [Enabled]

Enables or disables the external USB 3.0 controller.

►Super IO Configuration

Sets system Super I/O chip parameters for COM port. Press <Enter> to enter the sub-menu.

►Serial (COM) Port 0 Configuration

Sets detailed configuration of serial(COM) port 0. Press <Enter> to enter the sub-menu.

►Serial (COM) Port 0 [Enabled]

Enables or disables serial (COM) port 0.

►Serial (COM) Port 0 Settings [Auto]

Sets serial port 0 (COM). If set to "Auto", BIOS will optimize the IRQ automatically or you can set it manually.

►Power Management Setup

Sets system Power Management of EuP2013 and AC Power Loss behaviors. Press <Enter> to enter the sub-menu.

►EuP 2013 [Disabled]

Enables or disables the system power consumption according to EuP2013 regulation.

[Enabled] Optimize the system power consumption according to EuP 2013 regulation.

[Disabled] Disables this function.

Note: When enabled, the system will not support RTC wake up event functions.

▸Restore after AC Power Loss [Power Off]

Sets the system behaviors while encountering the AC power loss.

[Power Off] Leaves the system in power off state after restoring AC power.

[Power On] Boot up the system after restoring AC power.

[Last State] Restores the system to the previous state (power on/ power off) before AC power loss.

▸Windows 8/ 8.1 Configuration

Sets Windows 8/ 8.1 detailed configuration and behaviors. Press <Enter> to enter the sub-menu.

▸Windows 8/ 8.1 Feature [Disabled]

Enables the supports for Windows 8 or disables for other operating systems. Before enabling this item, make sure all installed devices & utilities (hardware & software) should meet the Windows 8 requirements.

[Enabled] The system will switch to UEFI mode to meet the Windows 8 requirement.

[Disabled] Disables this function.

▸MSI Fast Boot [Disabled]

MSI Fast Boot is the fastest way to boot the system. It will disable more devices to speed up system boot time which is faster than the boot time of “Fast Boot” .

[Enabled] Enables the MSI Fast Boot function to speed up booting time. And the following "Fast Boot" will be disabled and fixed.

[Disabled] Disables MSI Fast Boot.

▸Fast Boot [Disabled]

Enables or disables the Windows 8 fast boot feature. This item will only be available when "MSI Fast Boot" is disabled.

[Enabled] Enables the Fast Boot configuration to accelerate system boot time.

[Disabled] Disables the Fast Boot configuration.

Important

If you want to enter BIOS with enabled “MSI Fast Boot” mode or enabled "Fast Boot" mode, you have to click the "GO2BIOS" tab on MSI Fast Boot utility screen or press the "GO2BIOS" button (optional) on the motherboard. And then the system will enter to BIOS setup directly at next boot.

▸Secure Boot

Sets the Windows secure boot to prevent the unauthorized accessing. Press <Enter> to enter the sub-menu. This sub-menu will appear when “Windows 8/ 8.1 Feature” is enabled.

▸Secure Boot Support [Disabled]

Enables or disables secure boot support.

[Enabled] Enables the secure boot function and allow you to set the secure boot settings.

[Disabled] Disables this function.

►.Secure Boot Mode [Standard]

Selects the secure boot mode. This item is to select how the secure boot keys be loaded. This item appears when "Secure Boot" is enabled.

[Standard] The system will automatically load the secure keys from BIOS.

[Custom] Allows user to configure the secure boot settings and manually load the secure keys.

►Key Management

Manages the secure boot keys. Press <Enter> to enter the sub-menu. This sub-menu will appear when “Secure Boot Mode” sets to [Custom].

►Wake Up Event Setup

Sets system wake up behaviors for different sleep modes. Press <Enter> to enter the sub-menu.

►Wake Up Event By [BIOS]

Selects the wake up event by BIOS or operating system.

[BIOS] Activates the following items, and use these items to set the wake up events.

[OS] The wake up events will be defined by OS.

►Resume By RTC Alarm [Disabled]

Disables or enables the system wake up by RTC Alarm.

[Enabled] Enables the system to boot up on a scheduled time/ date.

[Disabled] Disables this function.

►Date (of month) Alarm/ Time (hh:mm:ss) Alarm

Sets RTC alarm date/ Time. If Resume By RTC Alarm is set to [Enabled], the system will automatically resume (boot up) on a specified date/hour/minute/second in these fields (using the <+> and <-> to select the date & time settings).

►Resume By PCI-E Device [Disabled]

Disables or enables the system wake up by PCI express device.

[Enabled] Enables the system to be awakened from the power saving modes when activity or input signal of PCIe device is detected.

[Disabled] Disables this function.

►Resume From S3 by USB Device [Disabled]

Disables or enables the system wake up by USB devices.

[Enabled] Enables the system to be awakened from S3 (Suspend to RAM) sleep state when activity of USB device is detected.

[Disabled] Disables this function.

►Resume From S3/S4/S5 by PS/2 Mouse [Disabled]

Disables or enables the system wake up by PS/2 mouse.

[Enabled] Enables the system to be awakened from S3/ S4/ S5 state when activity of PS/2 mouse is detected.

[Disabled] Disables this function.

▸Resume From S3/S4/S5 by PS/2 Keyboard [Disabled]

Disables or enables the system wake up by PS/2 keyboard.

[Any Key] Enables the system to be awakened from S3/ S4/ S5 state when activity of any key on PS/2 keyboard is detected.

[Hot Key] Enables the system to be awakened from S3/ S4/ S5 state when activity of hot key on PS/2 keyboard is detected.

[Disabled] Disables this function.

Boot

Sets the sequence of system boot devices.

▸Full Screen Logo Display [Enabled]

Enables or disables to show the full screen logo while system POST.

[Enabled] The OS boots straight to the GUI without showing the POST screen.

[Disabled] Shows the POST messages at booting.

▸Boot Mode Select [LEGACY+UEFI]

Sets the system boot mode from legacy or UEFI architecture depending on OS installation requirement. This item will become unselectable and will be configured automatically by BIOS when “Windows 8/ 8.1 Feature” is enabled.

[UEFI] Enables UEFI BIOS boot mode support only.

[LEGACY+UEFI] Enables both Legacy BIOS boot mode and UEFI BIOS boot.

▸FIXED BOOT ORDER Priorities

Sets device priority for system boot.

▸Boot Option #1~N

These items are used to prioritize the installed boot devices.

Security

▸Administrator Password

Sets administrator password for system security. Enters the administrator password if set; user has full rights to change the BIOS items.

▸User Password

Sets User Password for system security. Enters the user password if set; but user might have limited rights to change the BIOS items.



Important

When selecting the Administrator / User Password items, a password box will appear on the screen. Type the password then press <Enter>. The password typed now will replace any previous set password from CMOS memory. You will be prompted to confirm the password. You may also press <Esc> to abort the selection.

To clear a set password, press <Enter> when you are prompted to enter a new password. A message will confirm the password is being disabled. Once the password is disabled, you can enter the setup and OS without authorization.

►U-Key [Disabled]

Enables or disables U-Key as user's password to access the system.

►Make U-Key at

Makes a key at the USB flash drive to prevent other people from accessing the system. Only the user who has the key with the flash drive can access the system.

►Chassis Intrusion Configuration

Press <Enter> to enter the sub-menu.

►Chassis Intrusion [Disabled]

This function will be available if the chassis equips a chassis intrusion switch.

Once the chassis is opened, the system will record and issue a warning message. To clear the warning message, set the item to [Reset], then it will return to [Enabled] later. [Options: Disabled, Enabled, Reset]

Save & Exit

►Discard Changes and Exit

Exit BIOS setup without saving any change. This it is used to abandon all changes and exit BIOS setup.

►Save Changes and Reboot

This item is used to save all changes and reboot the system.

►Save Changes

This item is used to save current changes.

►Discard Changes

This item is used to discard current all changes and restore to the previous values.

►Restore Defaults

This item is used to restore/ load all default values by the BIOS vendor.

►Boot Override

The installed boot-able devices will appear on this menu, you can select one of them be a boot device to start booting.

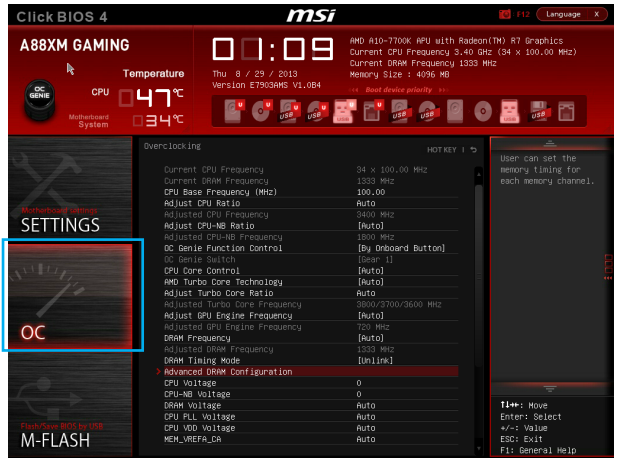

Important

- *Overclocking your PC manually is only recommended for advanced users.*
- *Overclocking is not guaranteed, and if done improperly, can void your warranty or severely damage your hardware.*
- *If you are unfamiliar with overclocking, we advise you to use OC Genie for easy overclocking.*

►Current CPU/ DRAM Frequency

These items show the current frequencies of installed CPU and Memory. Read-only.

►CPU Base Frequency (MHz) [Default]

Sets the CPU Base clock. You may overclock the CPU by adjusting this value. Please note that overclocking behavior and stability is not guaranteed. This item appears when the installed processor supports this function.

►Adjust CPU Ratio [Auto]

Sets the CPU ratio that is used to determine CPU clock speed. This item can only be changed if the processor supports this function.

►Adjusted CPU Frequency

Shows the adjusted CPU frequency. Read-only.

►Adjust CPU-NB Ratio [Auto]

Sets the CPU-NB ratio that is used to determine CPU-NB clock speed.

►Adjusted CPU-NB Frequency

Shows the adjusted CPU frequency. Read-only.

►OC Genie Function Control [By Onboard Button]

Enables the OC Genie function by virtual button in BIOS or physical button on motherboard. Enabling OC Genie function can automatically overclock the system with MSI optimized overclocking profile.

[By BIOS Options] OC Genie function is enabled by clicking the virtual OC Genie button at the top left corner of BIOS setup screen.

[By Onboard Button] OC Genie function is enabled by pressing the physical OC Genie button on the motherboard.

Important

- *We recommend that you do not to make any modification in OC menu and do not to load defaults after enabling the OC Genie function.*
- *Updating BIOS or clearing CMOS is not allowed in OC Genie mode, and it may cause OC Genie function fail or other effect.*

►AMD Turbo Core Technology [Auto]

Based on AMD Turbo Core Technology, part of CPU core ratio may pop down for providing more performance headroom for active CPU core, even AMD Cool'n'Quiet Technology is Disabled.

[Auto] Turbo Core Technology will linked to AMD Cool'n'Quiet Technology.

[Enabled] Enables this function.

[Disabled] Disables this function.

►Adjust Turbo Core Ratio [Auto]

Specifies the Turbo Core frequency multiplier.

►Adjusted Turbo Core Frequency

Shows the adjusted Turbo Core frequency. Read-only.

►Adjust GPU Engine Frequency [Auto]

Adjust GPU Engine Frequency.

►Adjusted GPU Engine Frequency

Shows the adjusted GPU Engine frequency. Read-only.

►DRAM Frequency [Auto]

Sets the DRAM frequency. Please note the overclocking behavior is not guaranteed.

►Adjusted DRAM Frequency

Shows the adjusted DRAM frequency. Read-only.

►Intel Extreme Memory Profile (XMP) [Disabled]

X.M.P. (Extreme Memory Profile) is the overclocking technology by memory module. This item will be available when you install the memory modules that support X.M.P. technology. When the Intel Extreme Memory Profile (XMP) is Enabled, the AMD Memory Profile (AMP) will be forced to be disabled.

[Disabled] Disables this function.

[Enabled] Choose to apply an Intel Extreme Memory Profile (XMP) to increase system performance.

▸AMD Memory Profile (AMP) [Disabled]

AMP is the overclocking technology by memory module. This item will be available when you install the memory modules that support AMP technology. When AMP is Enabled, the XMP will be forced to be disabled.

[Disabled] Disables this function.

[Enabled] Choose to apply an AMD Memory Profile (AMP) to increase system performance.

▸DRAM Timing Mode [Auto]

Selects the memory timing mode.

[Auto] DRAM timings will be determined based on SPD (Serial Presence Detect) of installed memory modules.

[Link] Allows user to configure the DRAM timing manually for all memory channel.

[UnLink] Allows user to configure the DRAM timing manually for respective memory channel.

▸Advanced DRAM Configuration

Press <Enter> to enter the sub-menu. This sub-menu will be activated after setting [Link] or [Unlink] in “DRAM Timing Mode”. User can set the memory timing for each memory channel. The system may become unstable or unbootable after changing memory timing. If it occurs, please clear the CMOS data and restore the default settings. (Refer to the Clear CMOS jumper/ button section to clear the CMOS data, and enter the BIOS to load the default settings.

▸XXX Voltage [Auto]

Sets these voltages. If set to "Auto", BIOS will set these voltages automatically or you can set it manually.

▸Spread Spectrum

This function reduces the EMI (Electromagnetic Interference) generated by modulating clock generator pulses.

[Enabled] Enables the spread spectrum function to reduce the EMI (Electromagnetic Interference) problem.

[Disabled] Enhances the overclocking ability of CPU Base clock.



- *If you do not have any EMI problem, leave the setting at [Disabled] for optimal system stability and performance. But if you are plagued by EMI, select the value of Spread Spectrum for EMI reduction.*
- *The greater the Spread Spectrum value is, the greater the EMI is reduced, and the system will become less stable. For the most suitable Spread Spectrum value, please consult your local EMI regulation.*
- *Remember to disable Spread Spectrum if you are overclocking because even a slight jitter can introduce a temporary boost in clock speed which may just cause your overclocked processor to lock up.*

►CPU Memory Changed Detect [Enabled]

Enables or disables the system to issue a warning message during boot when the CPU or memory has been replaced.

[Enabled] The system will issue a warning message during boot and than needs to load the default settings for new devices.

[Disabled] Disables this function and keeps the current BIOS settings.

►OC Retry Count [1]

Resets counts for overclocking retrying. When overclocking has failed, setting this item as [1, 2, 3] will allow system to reboot 1, 2, 3 times with the same overclocked configuration. If overclocking has failed every time, the system will restore the defaults.

►CPU Specifications

Press <Enter> to enter the sub-menu. This sub-menu displays the information of installed CPU. You can also access this information menu at any time by pressing [F4]. Read only.

►CPU Technology Support

Press <Enter> to enter the sub-menu. The sub-menu shows what the key features does the installed CPU support. Read only.

►MEMORY-Z

Press <Enter> to enter the sub-menu. This sub-menu displays all the settings and timings of installed memory.

►CPU Features

Press <Enter> to enter the sub-menu.

►AMD Cool'n'Quiet [Auto]

Enabled or disabled AMD Cool'n'Quiet function.

[Auto] Depends on AMD Design.

[Enable] Enables AMD Cool'n'Quiet function. The Cool'n'Quiet technology can effectively and dynamically lower CPU speed and power consumption.

[Disabled] Disables this function.

Important

When adjusting CPU Ratio, the Cool'n'Quiet function will be disabled automatically. For CPU which supports the Turbo Core Tech., please set AMD Turbo Core Technology and AMD Cool'n'Quiet as Disabled to retain the default CPU core speed.

►SVM Mode [Enabled]

Enables or disables CPU Virtualization.

[Enabled] Enables CPU Virtualization and allows a platform to run multiple operating systems in independent partitions. The system can function as multiple systems virtually.

[Disabled] Disables this function.

▶Core C6 State [Disabled]

Enables or disables C6 state support.

[Enabled] When the CPU enters C6 state, all cores will save architectural state and reduce core voltages to zero volts. Wake up the CPU from C6 state will take a lot longer.

[Disabled] Disables this function.

M-FLASH

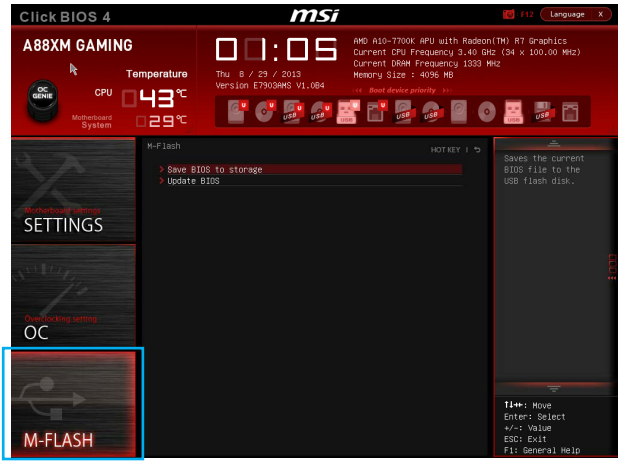

Important

M-Flash funcion allows you to update BIOS from USB flash disk (FAT32/ NTFS format only), or allows the system to boot from the BIOS file inside USB flash disk (FAT/ FAT32 format only).

▸**Save BIOS to storage**

Saves the current BIOS file to the USB flash disk. The USB flash disk drive should be in FAT32 format.

▸**Update BIOS**

Selects a BIOS file in the USB flash disk (NTFS/ FAT 32 format) to update the BIOS.

▸**Select one file to update BIOS**

Selects a BIOS file in the USB flash disk (NTFS/ FAT 32 format) to update the BIOS. The system will reboot after updating.

Important

Please note that the USB 3.0 ports (by VIA chipset) do not support M-Flash Update BIOS function.

OC PROFILE

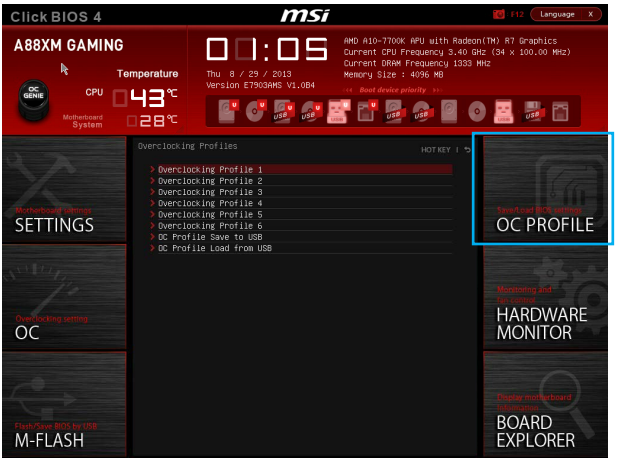

▸**Overclocking Profile 1/ 2/ 3/ 4/ 5/ 6**

Overclocking Profile 1/ 2/ 3/ 4/ 5/ 6 management. Press <Enter> to enter the sub-menu.

▸**Set Name for Overclocking Profile 1/ 2/ 3/ 4/ 5/ 6**

Names the current overclocking profile.

▸**Save Overclocking Profile 1/ 2/ 3/ 4/ 5/ 6**

Saves the current overclocking profile.

▸**Load Overclocking Profile 1/ 2/ 3/ 4/ 5/ 6**

Loads the current overclocking profile.

▸**Clear Overclocking Profile 1/ 2/ 3/ 4/ 5/ 6**

Clears the current overclocking profile.

▸**OC Profile Save to USB**

Saves OC profile to the USB flash disk drive. The USB flash disk should be FAT32 format only.

▸**OC Profile Load from USB**

Loads OC profile from the USB flash disk drive. The USB flash disk should be FAT32 format only.

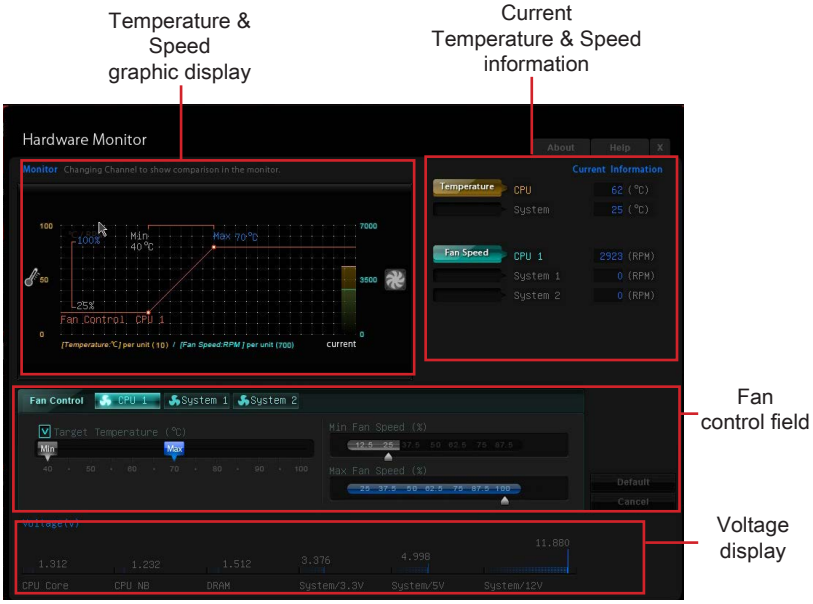

▶**Current Temperature & Speed information**

Shows the current CPU temperature, system temperature and fans' speeds.

▶**Temperature & Speed graphic display**

The red graph shows the minimum and maximum temperatures that be set on the "Fan control field". The yellow graph shows current CPU/ system temperature. The green shows current CPU/ System fan speed.

▶**Fan control field**

This motherboard provides a fan speed control feature call "Smart Fan Control". Smart Fan Control automatically controls fan speed depending on the current CPU temperature and to keep it with a specific operating speed. When the current CPU temperature is over the maximum temperature, the CPU/ system fan will run at the maximum speed. When the current CPU temperature is under the minimum temperature, the CPU/ system fan will run at the minimum speed. In this field, you can set the CPU and system fans' speeds and target temperatures.

Please follow the description below to set the temperatures and fan speeds.



- **a** - Selects a fan you want to specify the speed.
- **b** - Checks this item to activate the following items for changing default values.
- **c** - Slides the Min and Max tabs to set the minimum and maximum temperatures.
- **d** - Slides the arrow symbol to set the minimum fan speed in percentage.
- **e** - Slides the arrow symbol to set the maximum fan speed in percentage.
- **f** - Click the "Default" button to restore the default values. Or click the "Cancel" button to abandon all changes and restore to the previous values.

Important

- *The minimum values of temperature and speed can not be set larger then the maximum values.*
- *The changed settings will become effective after you save the changes and reboot the system.*

►Voltage display

Shows the current voltages of CPU, system and memory.

Appendix A

Realtek Audio

The Realtek audio provides 10-channel DAC that simultaneously supports 7.1 sound playback and 2 channels of independent stereo sound output (multiple streaming) through the Front-Out-Left and Front-Out-Right channels.

Software Configuration

After installing the audio driver (see Chapter 1 - Driver and Utilities), the “Realtek HD Audio Manager” icon will appear at the notification area (lower right of the screen). You may double click the icon and the GUI will pop up accordingly.

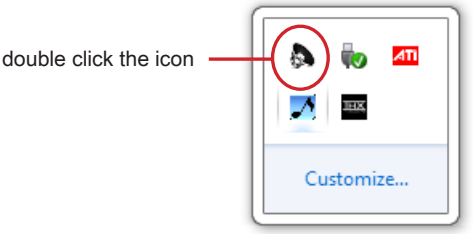

It is also available to enable the audio driver by clicking the **Realtek HD Audio Manager** from the **Control Panel**.

Software panel overview

The following figure describes the function of the Realtek HD Audio Manager panel.

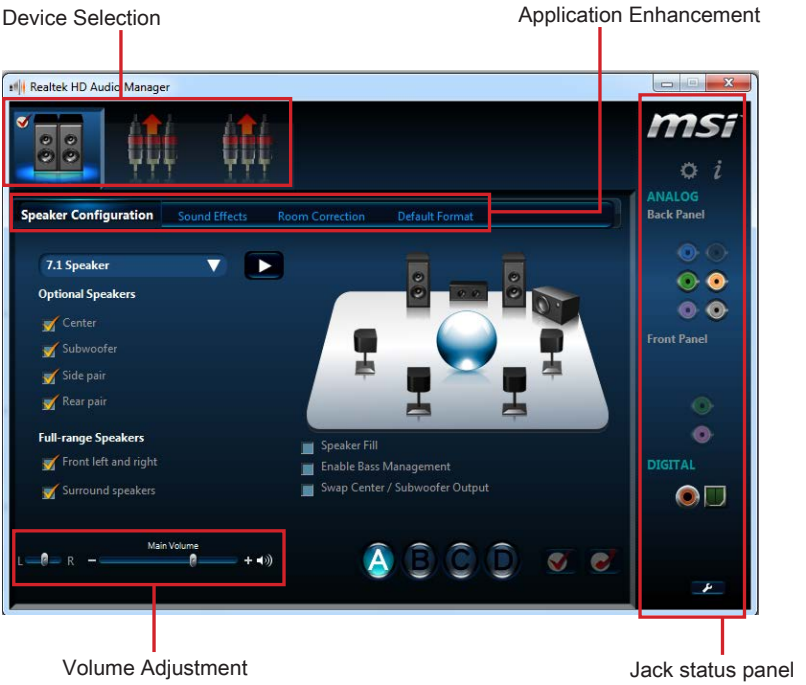

►Device Selection

Here you can select a audio output source to change the related options. The “check” sign (in orange) indicates the devices as default.

►Volume Adjustment

You can control the volume or balance the right/left side of the speakers that you plugged in front or rear panel by adjust the bar.

►Application Enhancement

The array of options will provide you a complete guidance of anticipated sound effect for both output and input device.

►Jack status panel

This panel depicts all render and capture devices currently connected with your computer.

Auto popup dialog

When you plug into the device at the jack, a dialogue window will pop up asking you which device is current connected.

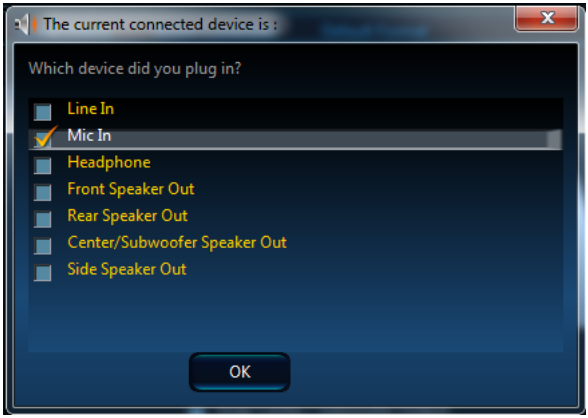

As you know, each jack corresponds to its default setting, you can refer to the next section “Hardware Default Setting”.

Hardware Default Setting

The following diagrams are audio back panel default setting.

- **Backpanel audio jacks to 2-channel speakers diagram**

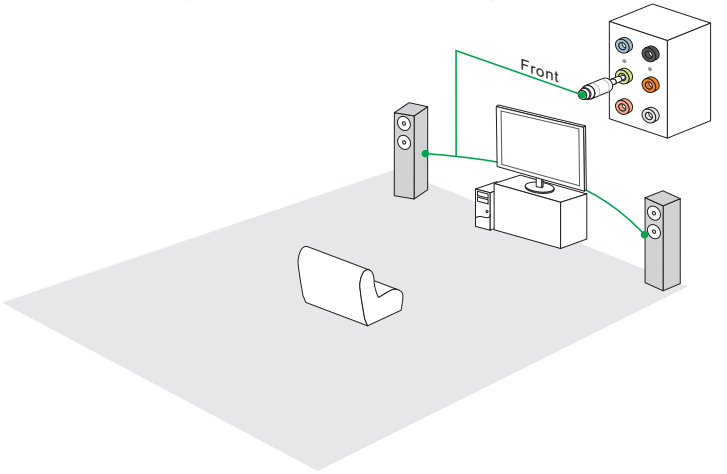

- **Backpanel audio jacks to 4-channel speakers diagram**

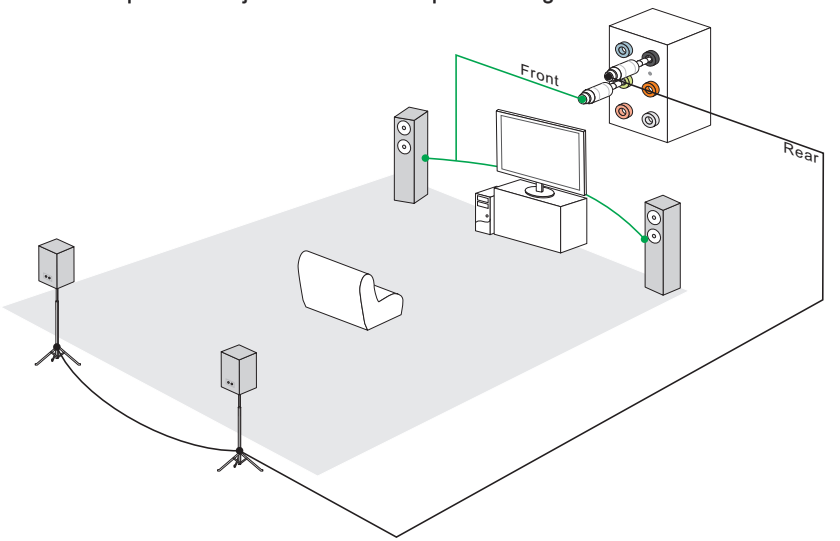

- Backpanel audio jacks to 6-channel speakers diagram

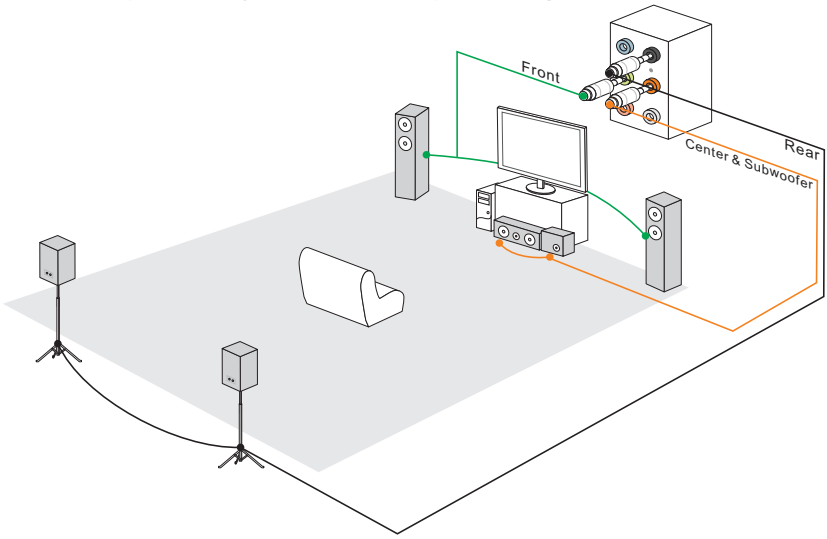

- Backpanel audio jacks to 8-channel speakers diagram

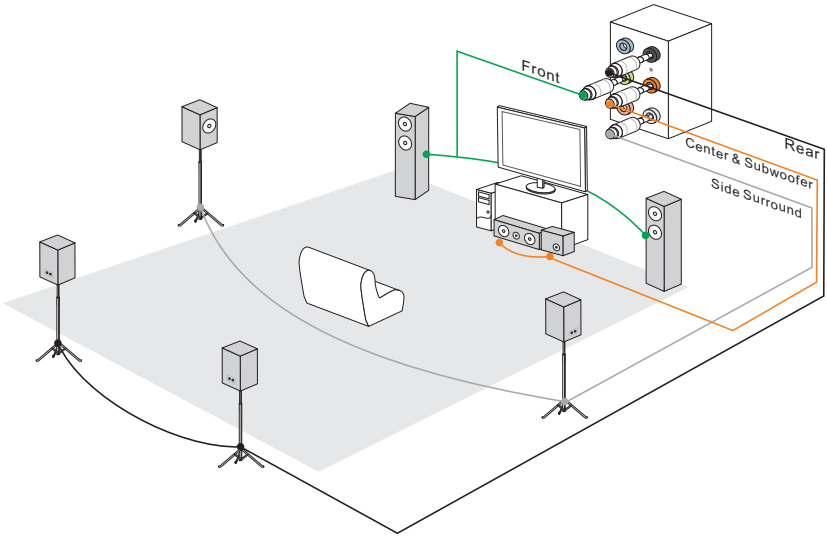

Appendix B

AMD RAID

This appendix will assist users in configuring and enabling RAID functionality.

Introduction

The motherboard comes with the AMD RAID controller that allows you to configure SATA hard drives as RAID sets.

AMD RAID controller offers RAID level 0 (Striping), RAID level 1 (Mirroring and Duplexing), RAID level 5 (Block Interleaved Distributed Parity), RAID level 10 (A Stripe of Mirrors) , Volume (JBOD) and RAIDABLE.

RAID0 breaks the data into blocks which are written to separate hard drives. Spreading the hard drive I/O load across independent channels greatly improves I/O performance.

RAID1 provides data redundancy by mirroring data between the hard drives and provides enhanced read performance.

RAID5 Provides data striping at the byte level and also stripe error correction information. This results in excellent performance and good fault tolerance. Level 5 is one of the most popular implementations of RAID.

RAID10 Not one of the original RAID levels, multiple RAID1 mirrors are created, and a RAID0 stripe is created over these.

Volume (JBOD) provides the ability to link-together storage from one or several disks, regardless of the size of the space on those disks, and Volume is useful in scavenging space on disks unused by other disks in the array. Volume does not provide performance benefits or data redundancy, and disk failure will result in data loss.

RAIDABLE allows a RAIDABLE disk to be transformed later to RAID0 or RAID1.

Important

- *Your motherboard may not support RAID5, please refer to Chapter 1 "Motherboard Specifications".*
- *The least number of hard drives for RAID 0 or RAID 1 is 2. The least number of hard drives for RAID 10 mode is 4. And the least number of hard drives for RAID 5 mode is 3.*
- *All the information/ volumes/ pictures listed in your system might differ from the illustrations in this appendix.*

Use the utility to accomplish the procedures:

- **Initialize Disk(s)** - To initialize a new disk drive for data storage.
- **Create Array** - Create arrays at different RAID levels (depending on the license level for the system)
- **Delete Array(s)** - Delete an array.
- **Swap Two Arrays** - Change the array order, especially for the AMD-RAID bootable array.
- **Manage Hot Sqare(s)** - Allows selection of global and dedicated hot spares.
- **View Disk Details** - View information about each disk.
- **View Array Details** - View information about each array.
- **Rescan All Channels** - Rescan all channels to detect new or removed disks and arrays.
- **Controller Options** - Change INT13 boot support, turn off Critical arrays or warning for Offline arrays while booting, or change the number of disks that can be spun-up when the system is powered-on.
- **Contiune to Boot** - Exit the BIOS Configuration Utility and continue booting the system.

Using AMD RAID Controller BIOS Configuration Utility

When booting the system, press <Ctrl + R> when the BIOS banner displays. After entering AMD RAID Controller BIOS Configuration Utility, the following screen is displayed.

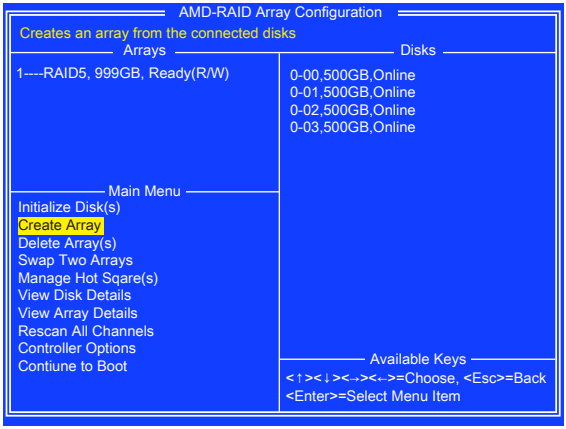

Understanding the Colour Code

Colour codes indicate the type or status of information at the BIOS Configuration Utility.

- **White text** - Indicates an available option or informational text.
- **Black text, yellow highlighting** - Indicates an option or device for which action might be taken.
- **Yellow text** - Indicates information about the yellow-highlighted option.
- **Green text** - Indicates an item that has been selected.
- **Light blue text** - Indicates that the item cannot be selected.
- **Magenta text** - Indicates items that are related to spares or boot options.
- **Red text** - Indicates a failed virtual or physical disk or a warning. For example, informational text might be red if an option is not available.

Initialize Disks

New disks and legacy disks must be initialized before they can be used to create an AMD-RAID array. Initialization writes AMD-RAID configuration information (metadata) to a disk.

Important

- *If a disk is part of an AMD-RAID array, the disk cannot be selected for initialization. To initialize the disk anyway, delete the AMD-RAID array. Data on the disk is deleted during initialization so ensure the correct disks are chosen to initialize.*
- *A legacy disk can contain valid data. When a legacy disk is initialized, all data on the disk is lost.*

To initialize disks:

1. At the “Main Menu”, use the arrow keys to highlight “Initialize Disk(s)”.

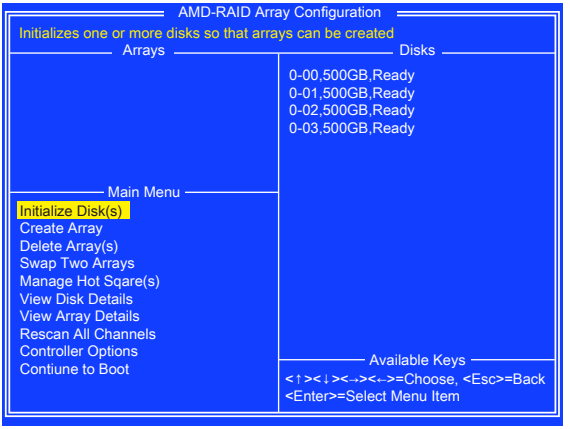

2. Press <Enter> to select Initialize Disk(s).
3. Select the disks to initialize by pressing <Insert> key.
4. Press <Enter> to initialize the selected disks.
5. Press the <C> key to confirm the initialization.

Create Arrays

Arrays can be created after the disks are initialized.

Important

- *For redundant arrays, the Create process is not finished until after the operating system and AMD-RAID OS drivers have been installed and the system has booted to the operating system. However, the arrays are immediately available to use for either a bootable array or a data array.*
- *If the system is booted from an AMD-RAID bootable array, the first array in the Arrays section must be the bootable array. The system boots only from the first array in the Arrays section. As necessary, use the Swap Two Arrays feature to swap arrays and place the bootable array in the first position.*

To create an array:

1. At the “Main Menu”, use the arrow keys to highlight “Create Array” and press <Enter>.

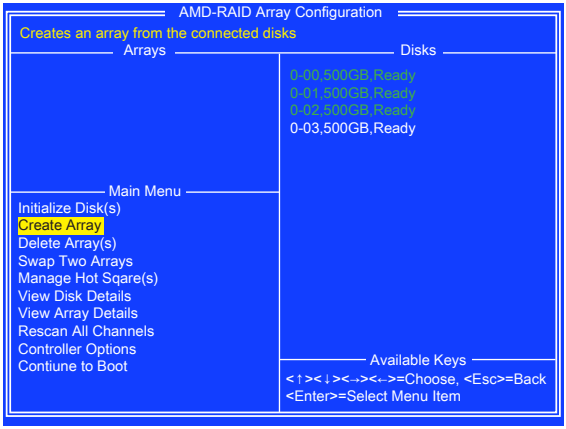

2. Select the disks with which to create the array by pressing <Insert> key.
3. Press <Enter> to include the selected disks in the array.
4. In the User Input section, use the <arrow keys> to select an array type. Only array types that can be created with the selected disks are available.
5. Press <Enter>.
6. Select an array size.
7. Press <Enter> when either the desired size or the maximum available size is reached.
8. Select a caching level using the <arrow keys> and press <Enter>.
9. Press <C> to confirm the array settings.

Delete Arrays

Important

Deleting an array permanently destroys all data that is on the array. This action cannot be undone and it is very unlikely the data can be recovered.

To delete an array:

1. At the “Main Menu”, use the arrow keys to highlight “Delete Array” and press <Enter>.

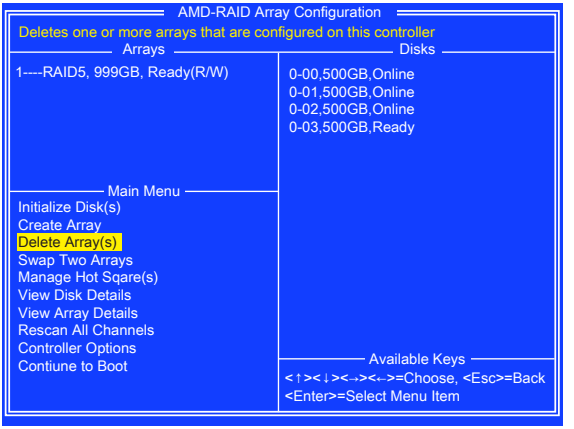

2. Select the arrays to delete by pressing <Insert> key.
3. Press <Enter> to delete the selected arrays.
4. Press <C> to confirm the deletion.

Swap Arrays

Use the Swap Two Arrays option to arrange arrays in a different order.

Important

If more than one array is created, install the operating system to any of them. However, a small amount of boot information is always written to a disk(s) in the first array (Array 1) of the Array section, regardless on which array the operating system is installed.

If anything happens to a disk in Array 1, the system might not be able to boot. It is recommended that the user install the operating system on an AMD-RAID bootable array at a redundant RAID level such as RAID1 or RAID5 and swap the array into the first position, if it is not already Array 1.

To swap arrays:

1. At the “Main Menu”, use the arrow keys to highlight “Swap Two Array” and press <Enter>.

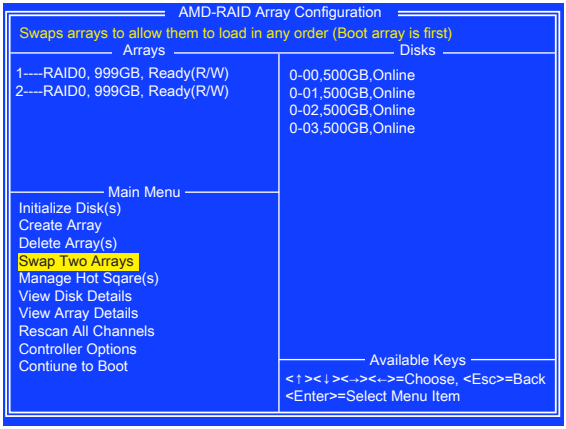

2. Select the arrays to swap by pressing <Insert> key.
3. Press <Enter> to swap the arrays.

Manage Spares

This option allows the user to assign or unassign global or dedicated spares.

At the Main Menu, use the <arrow keys> to highlight “Manage Host Spare(s)” and press <Enter> to enter submenu.

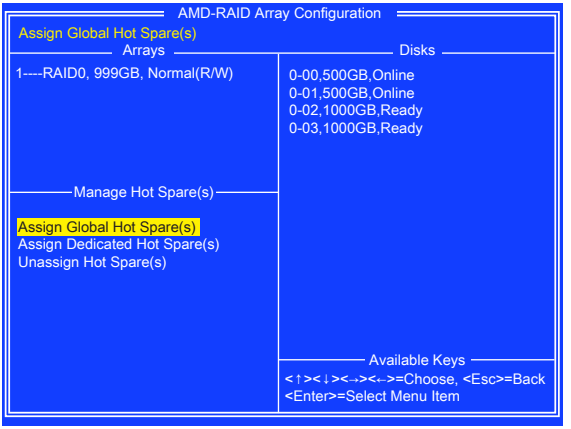

To assign global spares:

1. At the Manage Host Spare(s) submenu, use the <arrow keys> to highlight “Assign Global Hot Spare(s)” and press <Enter>.
2. Select the disks to assign as global spares by pressing <Insert> key.
3. Press <Enter> to assign the selected disks as global spares.

To assign dedicated spares:

1. At the Manage Host Spare(s) submenu, use the <arrow keys> to highlight “Assign Dedicated Hot Spare(s)” and press <Enter>.
2. Select the disks to assign as dedicated spares by pressing <Insert> key.
3. Press <Enter> to assign dedicated spares.
4. Press <C> to continue.

To unassign spares:

1. At the Manage Host Spare(s) submenu, use the <arrow keys> to highlight “Unassign Hot Spare(s)” and press <Enter>.
2. Select the disks to unassign as spares by pressing <Insert> key.
3. Press <Enter> to unassign the selected disks.
4. Press <C> to continue.

Change the Controller Options

Controller Options allows the user to configure options for the boot sequence.

At the Main Menu, use the <arrow keys> to highlight “Controller Options” and press <Enter> to enter submenu.

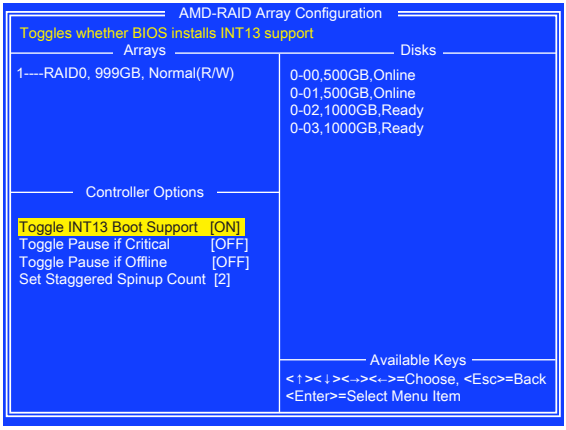

Important

By default, all options are On. It is recommended that options remain On.

Booting the system from an array

This option allows the user to enable boot support.

It is recommended that this option be disabled only if the system is booted from another device.

1. At the Controller Options submenu, use the <arrow keys> to highlight “Toggle INT13 Boot Support ” and press <Enter>.
2. Use the <arrow keys> to highlight “Toggle INT13 Boot Support”.
3. Press <Enter> to toggle between On and Off.

Pausing the boot sequence for warning messages

When the Pause feature is enabled and an array goes critical, offline, or there is another problem with the system, the boot process stops and an error message is displayed on the screen. The user must press Enter to continue booting.

If the Pause feature is disabled, error messages are displayed briefly, but the system continues to boot.

1. At the Controller Options submenu, use the <arrow keys> to highlight “Toggle Pause if Critical” and press <Enter>.
2. Set pauses to the boot sequence for critical/ offline warnings. Use the <arrow keys> to highlight Toggle Pause if Critical/ Toggle Pause if Offline.
3. Press <Enter> to toggle between On and Off.

Change the Staggered Spinup Count

Depending on a system's power supply load-rating, you might want to limit the number of disks that are spun-up together when a system is powered on.

1. At the Controller Options submenu, use the <arrow keys> to highlight "Set Staggered Spinup Count " and press <Enter>. The number within the brackets changes colour to indicate it is selected.
2. Use the <arrow keys> to change the number within the brackets. The minimum is 1 and the maximum is 8.
3. Press <Enter> to save the setting.

Installing Driver

■ New Windows 7/ Windows 8/ Windows 8.1 Installation

The following details the installation of the drivers while installing operating system.

1. During the operating system installation, after selecting the location to install Windows 7/ 8/ 8.1 click on “Load Driver” button to install a third party RAID driver.
2. When prompted, insert the “AMD RAID Driver” disk (optical drive or USB) and press Enter.



Please follow the instruction below to make an “AMD® RAID Driver” for yourself.

- *Insert the MSI Driver Disc into the optical drive.*
- *Click the “Browse CD” on the Setup screen.*
- *Copy all the contents in*
  - *\\ChipSet\W7_W8\Packages\Drivers\SBDrv\Bolton\RAID_Driver (for Windows 7 or Windows 8)*
  - *\\ChipSet\W81\Packages\Drivers\SBDrv\Bolton\RAID_Driver (for Windows 8.1)*
- *The driver diskette for AMD® RAID Controller is done.*

3. You should be shown a list of available SCSI Adapters.
4. Select the appropriate RAID controller and press ENTER.
5. The next screen should confirm that you have selected the RAID controller. Press ENTER again to continue.
6. You have successfully installed the RAID driver, and Windows setup should continue.
7. Leave the disk /USB drive in the computer until the system reboots itself. Windows setup will need to copy the files after the RAID volume is formatted, and Windows setup starts copying files.

■ Existing Windows Driver Installation

1. Insert the MSI Driver Disc into the optical drive.
2. The Disc will auto-run and the setup screen will appear.
3. Under the Driver tab, click on AMD chipset drivers by your need. The AMD chipset drivers includes RAID Driver.
4. The drivers will be automatically installed.

■ Confirming Windows Driver Installation

1. From Windows, open the Control Panel from My Computer followed by the System icon.
2. Choose the Hardware tab, then click the Device Manager tab.
3. Click the “+” in front of the RAID Controllers hardware type. The driver AMD RAID Controller should appear.

Installing OS on 2.2TB RAID

If you plan to install Windows 7/ 8/ 8.1 64bit on a RAID volume greater than 2.2TB, you can only manually create the RAID array in EFI shell.

WARNING

Create raid array will erase all the data stored on hard drives! Make sure to back up your files! There is no way to reverse the process!

The following describes an example of how to install Windows 7/ 8/ 8.1 64bit on a RAID 0 volume greater than 2.2TB.

1. Copy \\OtherDriver\Rcadm\rcadm.efi to root of a FAT32 USB Flash Drive from the MSI Driver Disc
2. Plug-in the USB Flash Drive into a USB port on the motherboard.
3. Access BIOS → SETTING → Advanced → Integrated Peripherals submenu.
4. Set the “SATA Mode” option to “RAID Mode”.
5. Set the “Board SATA RAID ROM” option to “UEFI DRIVER”.

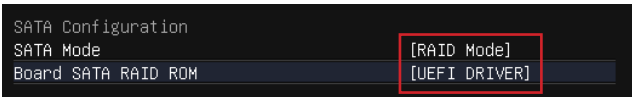

6. Save and then reboot.
7. Press F11 while system booting to access boot device selecting menu.

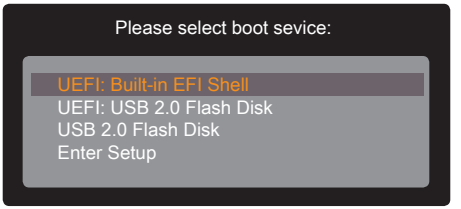

8. Select “UEFI: Built-in EFI Shell” to access the EFI Shell environment.
9. Enter “fs0:” at the EFI shell prompt to change the current directory to the root of the USB drive.

```
Shell> fs0:

fs0:\>
```

10. Enter “rcadm -M -qa” to see HDD information list.
11. Refer the list, enter “rcadm -M -id -d 0 1” to initialize HDD 0 and HDD 1.

```
fs0:\> rcadm -M -id -d 0 1

initializing disk 0
initializing disk 1
```

10. Enter “rcadm -C –r0 -d 0 1” to create RAID 0 (“C”=Createa array, “r0”=RAID 0, d 0 1=HDD 0 and HDD 1). If succeeded, you will see a message “created successfully“.

```
fs0:\> rcadm -C -r0 -d 0 1

created successfully
```

11. Reboot and install Windows 7/ 8/ 8.1 64bit (refer to **Appendix B - Installing Driver** to install AMD RAID driver).